MASTER INSTRUMENT CORPORATION

SINGLE-PHASE BRIDGE RECTIFIER KBPC2505N THRU KBPC2510N	VOLTAGE RANGE 50 to 1000 Volts CURRENT 25 Amperes

FEATURES

- Low cost
- This series is UL recognized under component index, file number E127707
- High forward surge current capability
- Integrally molded heatsink provide very low thermal resistance
- High isolation voltage from case to lugs
- High temperature soldering guaranteed: 260°C/10 second, at 5 lbs. (2.3kg) tension.

BR-35N

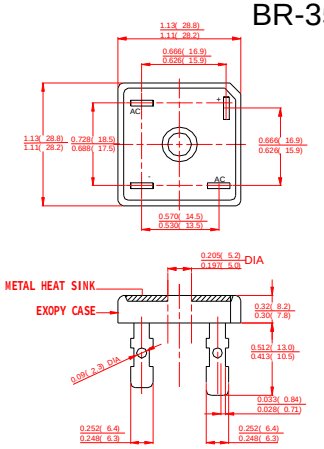

Dimensions in inches and (millimeters)

MECHANICAL DATA

- Case: Molded plastic body
- Terminal: Lead solderable per MIL-STD-202E method 208C.
- Polarity: Polarity symbols molded on case
- Mounting: Thru hole for #6 screw, 5.0 in.-lbs torque max.
- Weight:0.55ounce, 15.6 grams

MAXIMUM RATINGS AND ELECTRICAL CHARACTERISTICS

Ratings at 25°C ambient temperature unless otherwise specified.
Single phase, half wave, 60Hz, resistive or inductive load.
For capacitive load derate current by 20%.

	SYMBOLS	KBPC 25005N	KBPC 2501N	KBPC 2502N	KBPC 2504N	KBPC 2506N	KBPC 2508N	KBPC 2510N	UNITS
Maximum Repetitive Peak Reverse Voltage	V_{RRM}	50	100	200	400	600	800	1000	Volts
Maximum RMS Voltage	V_{RMS}	35	70	140	280	420	560	700	Volts
Maximum DC Blocking Voltage	V_{DC}	50	100	200	400	600	800	1000	Volts
Maximum Average Forward Rectified Output Current, at T_C=50℃(Note1, 2)	$I_{(AV)}$	25							Amps
Peak Forward Surge Current 8.3ms single half sine-wave superimposed on rated load (JEDEC Method)	I_{FSM}	300							Amps
Rating for Fusing(t<8.3ms)	I^2T	373							A^2S
Maximum Instantaneous Forward Voltage at 12.5A	V_F	1.1							Volts
Maximum DC Reverse Current at rated DC blocking voltage, T_A=25℃	I_R	10							µAmps
Maximum DC Reverse Current at rated DC blocking voltage, T_A=150℃	I_R	1.0							mAmps
Isolation Voltage from case to leads	V_{ISO}	2500							V_{AC}
Typical Thermal Resistance (Note 1, 2)	$R_{\theta JC}$	2.0							℃/W
Operating Temperature Range	T_J	-55 to +150							℃
Storage Temperature Range	T_{STG}	-55 to +150							℃

NOTES:

1. Unit mounted on 5”×**6**”×**4**.9” thick (12.8mm×1**5**.2mm×**12**.**4**mm) Al. plate.
2. Bolt down on heat-sink with silicone thermal compound between bridge and mounting surface for maximum heat transfer efficiency with #10 screw.

www.BDTIC.com/MIC

MASTER INSTRUMENT CORPORATION

SINGLE-PHASE BRIDGE RECTIFIER KBPC2505N THRU KBPC2510N	VOLTAGE RANGE 50 to 1000 Volts CURRENT 25 Amperes

RATINGS AND CHARACTERISTIC CURVES KBPC2505N THRU KBPC2510N

FIG.1–TYPICAL FORWARD CURRENT DERATING CURVE

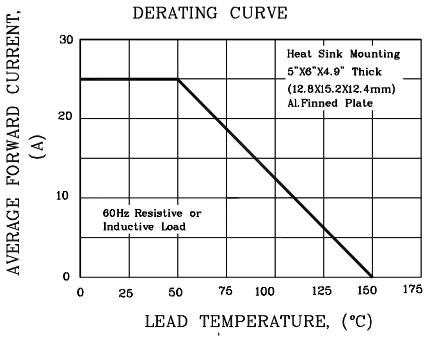

FIG.2–MAXIMUM NON-REPETITIVE PEAK FORWARD SURGE CURRENT

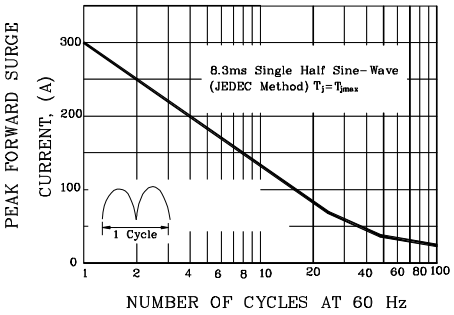

FIG.3–TYPICAL INSTANTANEOUS FORWARD CHARACTERISTICS

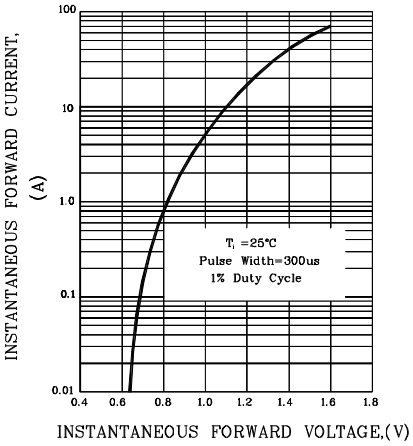

FIG.4–TYPICAL REVERSE CHARACTERISTICS

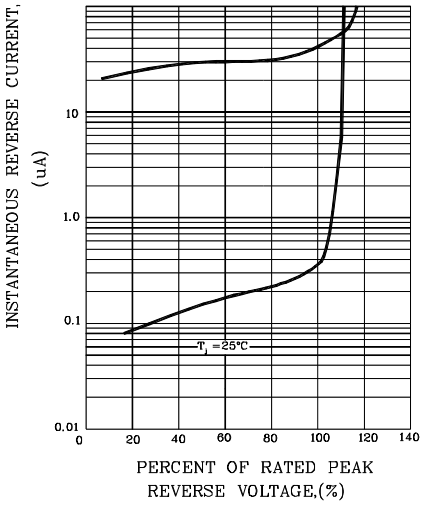

FIG.5–TYPICAL JUNCTION CAPACITANCE

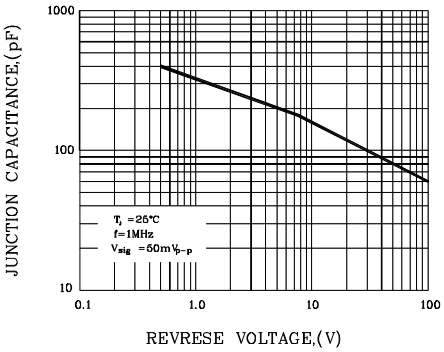

www.BDTIC.com/MIC