10-/8-Bit, 1.25-MSPS, MICRO-POWER, MINIATURE SAR ANALOG-TO-DIGITAL CONVERTERS

FEATURES

- **1.25-MHz Sample Rate Serial Device**
- **10-Bit Resolution – ADS7887**
- **8-Bit Resolution – ADS7888**
- **Zero Latency**
- **25-MHz Serial Interface**
- **Supply Range: 2.35 V to 5.25 V**
- **Typical Power Dissipation at 1.25 MSPS:**
  - **– 3.8 mW at 3-V V_{DD}**
  - **– 8 mw at 5-V V_{DD}**
- **±0.35 LSB INL, DNL – ADS7887**
- **±0.15 LSB INL, ±0.1 LSB DNL – ADS7888**
- **61dB SINAD, -84 dB THD – ADSA7887**
- **49.5 dB SINAD, -67.5 dB THD – ADS7888**
- **Unipolar Input Range: 0 V to V_{DD}**
- **Power Down Current: 1 µA**
- **Wide Input Bandwidth: 15 MHz at 3 dB**
- **6-Pin SOT23 and SC70 Packages**

APPLICATIONS

- **Base Band Converters in Radio Communication**
- **Motor Current/Bus Voltage Sensors in Digital Drives**
- **Optical Networking (DWDM, MEMS Based Switching)**
- **Optical Sensors**
- **Battery Powered Systems**
- **Medical Instrumentations**
- **High-Speed Data Acquisition Systems**
- **High-Speed Closed-Loop Systems**

DESCRIPTION

The ADS7887 is a 10-bit, 1.25-MSPS analog-to-digital converter (ADC), and the ADS7888 is a 8-bit, 1.25-MSPS ADC. The devices include a capacitor based SAR A/D converter with inherent sample and hold. The serial interface in each device is controlled by the $\overline{CS}$ and SCLK signals for glueless connections with microprocessors and DSPs. The input signal is sampled with the falling edge of $\overline{CS}$, and SCLK is used for conversion and serial data output.

The devices operate from a wide supply range from 2.35 V to 5.25 V. The low power consumption of the devices make them suitable for battery-powered applications. The devices also include a power saving powerdown feature for when the devices are operated at lower conversion speeds.

The high level of the digital input to the device is not limited to device V_{DD}. This means the digital input can go as high as 5.25 V when device supply is 2.35 V. This feature is useful when digital signals are coming from other circuit with different supply levels. Also this relaxes restriction on power up sequencing.

The ADS7887 and ADS7888 are available in 6-pin SOT23 and SC70 packages and are specified for operation from -40°C to 125°C.

Micro-Power Miniature SAR Converter Family

BIT	< 300 KSPS	300 KSPS – 1.25 MSPS
12-Bit	ADS7866 (1.2 V_{DD} to 3.6 V_{DD})	ADS7886 (2.35 V_{DD} to 5.25 V_{DD})
10-Bit	ADS7867 (1.2 V_{DD} to 3.6 V_{DD})	ADS7887 (2.35 V_{DD} to 5.25 V_{DD})
8-Bit	ADS7868 (1.2 V_{DD} to 3.6 V_{DD})	ADS7888 (2.35 V_{DD} to 5.25 V_{DD})

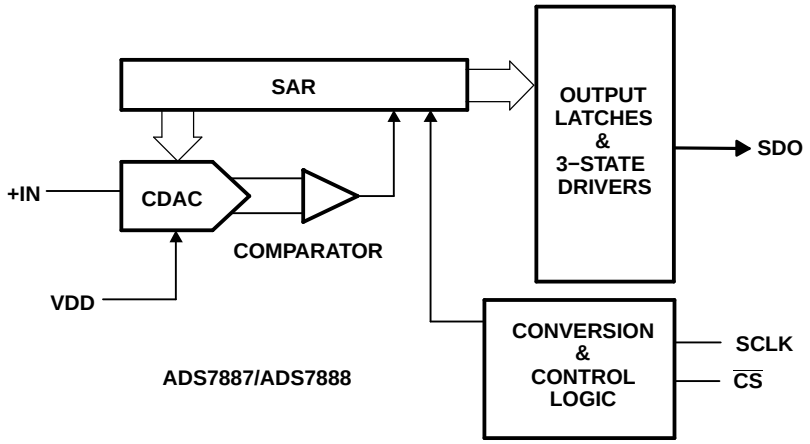

These devices have limited built-in ESD protection. The leads should be shorted together or the device placed in conductive foam during storage or handling to prevent electrostatic damage to the MOS gates.

PACKAGE/ORDERING INFORMATION(1)

DEVICE	MAXIMUM INTEGRAL LINEARITY (LSB)	MAXIMUM DIFFEREN-TIAL LINEARITY (LSB)	NO MISSING CODES AT RESOLUTION (BIT)	PACK-AGE TYPE	PACK-AGE DESIG-NATOR	TEMPERATURE RANGE	PACKAGE MARKING	ORDERING INFORMATION	TRANSPORT MEDIA QUANTITY
ADS7887	±0.75	±0.5	10	6-Pin SOT23	DBV	–40°C to 125°C	BAWQ	ADS7887SDBVT	Tape and reel 250
							BAWQ	ADS7887SDBVR	Tape and reel 3000
				6-Pin SC70	DCK		BNI	ADS7887SDCKT	Tape and reel 250
							BNI	ADS7887SDCKR	Tape and reel 3000
ADS7888	±0.3	±0.3	8	6-Pin SOT23	DBV	–40°C to 125°C	BAZQ	ADS7888SDBVT	Tape and reel 250
							BAZQ	ADS7888SDBVR	Tape and reel 3000
				6-Pin SC70	DCK		BNH	ADS7888SDCKT	Tape and reel 250
							BNH	ADS7888SDCKR	Tape and reel 3000

(1) For most current package and ordering information, see the Package Option Addendum at the end of this document, or see the TI website at www.ti.com.

ABSOLUTE MAXIMUM RATINGS(1)

		UNIT
+IN to AGND		–0.3 V to $+V_{DD}$ +0.3 V
$+V_{DD}$ to AGND		–0.3 V to 7.0 V
Digital input voltage to GND		–0.3V to (7.0 V)
Digital output to GND		–0.3 V to ($+V_{DD}$ + 0.3 V)
Operating temperature range		–40°C to 125°C
Storage temperature range		–65°C to 150°C
Junction temperature (T_J Max)		150°C
Power dissipation, SOT23 and SC70 packages		(T_J Max–T_A)/θ_{JA}
θ_{JA} Thermal impedance	SOT23	295.2°C/W
	SC70	351.3°C/W
Lead temperature, soldering	Vapor phase (60 sec)	215°C
	Infrared (15 sec)	220°C

(1) Stresses above those listed under *absolute maximum ratings* may cause permanent damage to the device. Exposure to absolute maximum conditions for extended periods may affect device reliability.

ADS7887 SPECIFICATIONS

$+V_{DD}$ = 2.35 V to 5.25 V, T_A = –40°C to 125°C, f_{sample} = 1.25 MHz

PARAMETER		TEST CONDITIONS	MIN	TYP	MAX	UNIT
ANALOG INPUT						
	Full-scale input voltage span(1)		0		V_{DD}	V
	Absolute input voltage range	+IN	–0.20		V_{DD}+0.20	V
C_i	Input capacitance(2)			21		pF
I_{Ilkg}	Input leakage current	T_A = 125°C		40		nA
SYSTEM PERFORMANCE						
	Resolution			10		Bits
	No missing codes		10			Bits
INL	Integral nonlinearity		–0.75	±0.35	0.75	LSB(3)
DNL	Differential nonlinearity		–0.5	±0.35	0.5	LSB
E_O	Offset error(4)(5)(6)		–1.5	±0.5	1.5	LSB
E_G	Gain error(5)		–1	±0.5	1	LSB
SAMPLING DYNAMICS						
	Conversion time	25-MHz SCLK	530	560		ns
	Acquisition time		260			ns
	Maximum throughput rate	25-MHz SCLK			1.25	MHz
	Aperture delay			5		ns
	Step Response			160		ns
	Overvoltage recovery			160		ns
DYNAMIC CHARACTERISTICS						
THD	Total harmonic distortion(7)	100 kHz		–84	–72	dB
SINAD	Signal-to-noise and distortion	100 kHz	60.5	61		dB
SFDR	Spurious free dynamic range	100 kHz	73	81		dB
	Full power bandwidth	At –3 dB		15		MHz
DIGITAL INPUT/OUTPUT						
Logic family — CMOS						
V_{IH}	High-level input voltage	VDD = 2.35 V to 5.25 V	V_{DD}– 0.4		5.25	V
V_{IL}	Low-level input voltage	V_{DD} = 5 V			0.8	V
		V_{DD} = 3 V			0.4	
V_{OH}	High-level output voltage	At I_{source} = 200 µA	V_{DD}–0.2			V
V_{OL}	Low-level output voltage	At I_{sink} = 200 µA			0.4	
POWER SUPPLY REQUIREMENTS						
$+V_{DD}$	Supply voltage		2.35	3.3	5.25	V
	Supply current (normal mode)	At V_{DD} = 2.35 V to 5.25 V, 1.25-MHz throughput			2	mA
		At V_{DD} = 2.35 V to 5.25 V, static state			1.5	
	Power down state supply current	SCLK off			1	µA
		SCLK on (25 MHz)			200	
	Power dissipation at 1.25 MHz throughput	V_{DD} = 5 V		8	10	mW
		V_{DD} = 3 V		3.8	6	

(1) Ideal input span; does not include gain or offset error.
(2) Refer Figure 36 for details on sampling circuit
(3) LSB means least significant bit
(4) Measured relative to an ideal full-scale input
(5) Offset error and gain error ensured by characterization.
(6) First transition of 000H to 001H at 0.5 × ($V_{ref}/2^{10}$)
(7) Calculated on the first nine harmonics of the input frequency

ADS7887 SPECIFICATIONS (continued)

$+V_{DD}$ = 2.35 V to 5.25 V, T_A = –40°C to 125°C, f_{sample} = 1.25 MHz

PARAMETER	TEST CONDITIONS	MIN	TYP	MAX	UNIT
Power dissipation in static state	V_{DD} = 5 V		5.5	7.5	mW
	V_{DD} = 3 V		3	4.5	
Power down time				0.1	µs
Power up time				0.8	µs
Invalid conversions after power up				1	
TEMPERATURE RANGE					
Specified performance		–40		125	°C

ADS7888 SPECIFICATIONS

$+V_{DD}$ = 2.35 V to 5.25 V, T_A = –40°C to 125°C, f_{sample} = 1.25 MHz

PARAMETER		TEST CONDITIONS	MIN	TYP	MAX	UNIT
ANALOG INPUT						
	Full-scale input voltage span (1)		0		V_{DD}	V
	Absolute input voltage range	+IN	–0.20		V_{DD}+0.20	V
C_i	Input capacitance (2)			21		pF
I_{Ilkg}	Input leakage current	T_A = 125°C		40		nA
SYSTEM PERFORMANCE						
	Resolution			8		Bits
	No missing codes		8			Bits
INL	Integral nonlinearity		–0.3	±0.15	0.3	LSB (3)
DNL	Differential nonlinearity		–0.3	±0.1	0.3	LSB
E_O	Offset error (4) (5) (6)		–0.5	±0.15	0.5	LSB
E_G	Gain error (5)		–0.5	±0.15	0.5	LSB
SAMPLING DYNAMICS						
	Conversion time	25-MHz SCLK	450	480		ns
	Acquisition time	1.5 MSPS mode, Figure 3	206			ns
	Maximum throughput rate	25-MHz SCLK			1.25	MHz
	Aperture delay			5		ns
	Step Response			160		ns
	Overvoltage recovery			160		ns
DYNAMIC CHARACTERISTICS						
THD	Total harmonic distortion (7)	100 kHz		–67.5	–65	dB
SINAD	Signal-to-noise and distortion	100 kHz	49	49.5		dB
SFDR	Spurious free dynamic range	100 kHz	65	77		dB
	Full power bandwidth	At –3 dB		15		MHz
DIGITAL INPUT/OUTPUT						
Logic family — CMOS						
V_{IH}	High-level input voltage	V_{DD} = 2.35 V to 5.25 V	V_{DD}–0.4		5.25	V
V_{IL}	Low-level input voltage	V_{DD} = 5 V			0.8	V
		V_{DD} = 3 V			0.4	
V_{OH}	High-level output voltage	At I_{source} = 200 µA	V_{DD}–0.2			V
V_{OL}	Low-level output voltage	At I_{sink} = 200 µA			0.4	
POWER SUPPLY REQUIREMENTS						
$+V_{DD}$	Supply voltage		2.35	3.3	5.25	V
	Supply current (normal mode)	At V_{DD} = 2.35 V to 5.25 V, 1.25-MHz throughput			2	mA
		At V_{DD} = 2.35 V to 5.25 V, static state			1.5	
	Power down state supply current	SCLK off			1	µA
		SCLK on (25 MHz)			200	
	Power dissipation at 1.25 MHz throughput	V_{DD} = 5 V		8	10	mW
		V_{DD} = 3 V		3.8	6	

(1) Ideal input span; does not include gain or offset error.
(2) Refer Figure 36 for details on sampling circuit
(3) LSB means least significant bit
(4) Measured relative to an ideal full-scale input
(5) Offset error and gain error ensured by characterization.
(6) First transition of 000H to 001H at ($V_{ref}/2^8$)
(7) Calculated on the first nine harmonics of the input frequency

ADS7888 SPECIFICATIONS (continued)

$+V_{DD}$ = 2.35 V to 5.25 V, T_A = –40°C to 125°C, f_{sample} = 1.25 MHz

PARAMETER	TEST CONDITIONS	MIN	TYP	MAX	UNIT
Power dissipation in static state	V_{DD} = 5 V		5.5	7.5	mW
	V_{DD} = 3 V		3	4.5	
Power down time				0.1	µs
Power up time				0.8	µs
Invalid conversions after power up				1	
TEMPERATURE RANGE					
Specified performance		–40		125	°C

TIMING REQUIREMENTS (see Figure 1)

All specifications typical at T_A = –40°C to 125°C, V_{DD} = 2.35 V to 5.25 V, unless otherwise specified.

PARAMETER			TEST CONDITIONS(1)	MIN	TYP	MAX	UNIT
t_{conv}	Conversion time	ADS7887	V_{DD} = 3 V			14 × t_{SCLK}	ns
			V_{DD} = 5 V			14 × t_{SCLK}	
		ADS7888	V_{DD} = 3 V			12 × t_{SCLK}	
			V_{DD} = 5V			12 × t_{SCLK}	
t_q	Minimum quiet time needed from bus 3-state to start of next conversion		V_{DD} = 3 V	40			ns
			V_{DD} = 5 V	40			
t_{d1}	Delay time, $\overline{CS}$ low to first data (0) out		V_{DD} = 3 V		15	25	ns
			V_{DD} = 5 V		13	25	
t_{su1}	Setup time, $\overline{CS}$ low to SCLK low		V_{DD} = 3 V	10			ns
			V_{DD} = 5 V	10			
t_{d2}	Delay time, SCLK falling to SDO		V_{DD} = 3 V		15	25	ns
			V_{DD} = 5 V		13	25	
t_{h1}	Hold time, SCLK falling to data valid(2)		V_{DD} < 3 V	7			ns
			V_{DD} > 5 V	5.5			
t_{d3}	Delay time, 16th SCLK falling edge to SDO 3-state		V_{DD} = 3 V		10	25	ns
			V_{DD} = 5 V		8	20	
t_{w1}	Pulse duration, $\overline{CS}$		V_{DD} = 3 V	25	40		ns
			V_{DD} = 5 V	25	40		
t_{d4}	Delay time, $\overline{CS}$ high to SDO 3-state, Figure 3		V_{DD} = 3 V		17	30	ns
			V_{DD} = 5 V		15	25	
t_{wH}	Pulse duration, SCLK high		V_{DD} = 3 V	0.4 × t_{SCLK}			ns
			V_{DD} = 5 V	0.4 × t_{SCLK}			
t_{wL}	Pulse duration, SCLK low		V_{DD} = 3 V	0.4 × t_{SCLK}			ns
			V_{DD} = 5 V	0.4 × t_{SCLK}			
	Frequency, SCLK		V_{DD} = 3 V			25	MHz
			V_{DD} = 5 V			25	
t_{d5}	Delay time, second falling edge of clock and $\overline{CS}$ to enter in powerdown (use min spec not to accidently enter in powerdown) Figure 4		V_{DD} = 3 V	-2		5	ns
			V_{DD} = 5 V	-2		5	
t_{d6}	Delay time, $\overline{CS}$ and 10th falling edge of clock to enter in powerdown (use max spec not to accidently enter in powerdown) Figure 4		V_{DD} = 3 V	2		-5	ns
			V_{DD} = 5 V	2		-5	

(1) 3-V Specifications apply from 2.35 V to 3.6 V, and 5-V specifications apply from 4.75 V to 5.25 V.
(2) With 50-pf load.

DEVICE INFORMATION

SOT23/SC70 PACKAGE
(TOP VIEW)

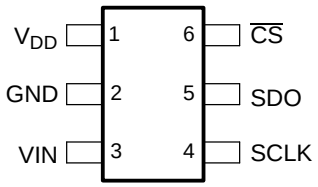

TERMINAL FUNCTIONS

TERMINAL		I/O	DESCRIPTION
NAME	NO.		
V_{DD}	1	–	Power supply input also acts like a reference voltage to ADC.
GND	2	–	Ground for power supply, all analog and digital signals are referred with respect to this pin.
VIN	3	I	Analog signal input
SCLK	4	I	Serial clock
SDO	5	O	Serial data out
$\overline{CS}$	6	I	Chip select signal, active low

ADS7887 NORMAL OPERATION

The cycle begins with the falling edge of $\overline{CS}$. This point is indicated as **a** in Figure 1. With the falling edge of $\overline{CS}$, the input signal is sampled and the conversion process is initiated. The device outputs data while the conversion is in progress. The data word contains 4 leading zeros, followed by 10-bit data in MSB first format and padded by 2 lagging zeros.

The falling edge of $\overline{CS}$ clocks out the first zero, and a zero is clocked out on every falling edge of the clock until the third edge. Data is in MSB first format with the MSB being clocked out on the 4th falling edge. Data is padded with two lagging zeros as shown in Figure 1. On the 16th falling edge of SCLK, SDO goes to the 3-state condition. The conversion ends on the 14th falling edge of SCLK. The device enters the acquisition phase on the first rising edge of SCLK after the 13th falling edge. This point is indicated by **b** in Figure 1.

$\overline{CS}$ can be asserted (pulled high) after 16 clocks have elapsed. It is necessary not to start the next conversion by pulling $\overline{CS}$ low until the end of the quiet time (t_q) after SDO goes to 3-state. To continue normal operation, it is necessary that $\overline{CS}$ is not pulled high until point **b**. Without this, the device does not enter the acquisition phase and no valid data is available in the next cycle. (Also refer to power down mode for more details.) $\overline{CS}$ going high any time after the conversion start aborts the ongoing conversion and SDO goes to 3-state.

The high level of the digital input to the device is not limited to device V_{DD}. This means the digital input can go as high as 5.25 V when the device supply is 2.35 V. This feature is useful when digital signals are coming from another circuit with different supply levels. Also, this relaxes the restriction on power up sequencing. However, the digital output levels (V_{OH} and V_{OL}) are governed by V_{DD} as listed in the SPECIFICATIONS table.

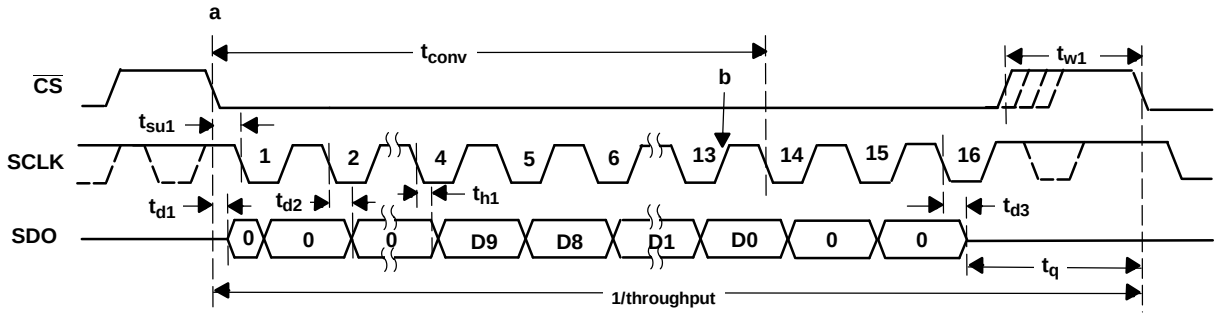

Figure 1. ADS7887 Interface Timing Diagram

ADS7888 NORMAL OPERATION

The cycle begins with the falling edge of $\overline{CS}$. This point is indicated as **a** in Figure 2. With the falling edge of $\overline{CS}$, the input signal is sampled and the conversion process is initiated. The device outputs data while the conversion is in progress. The data word contains 4 leading zeros, followed by 8-bit data in MSB first format and padded by 4 lagging zeros.

The falling edge of $\overline{CS}$ clocks out the first zero, and a zero is clocked out on every falling edge of the clock until the third edge. Data is in MSB first format with the MSB being clocked out on the 4th falling edge. Data is padded with four lagging zeros as shown in Figure 2. On the 16th falling edge of SCLK, SDO goes to the 3-state condition. The conversion ends on the 12th falling edge of SCLK. The device enters the acquisition phase on the first rising edge of SCLK after the 11th falling edge. This point is indicated by **b** in Figure 2.

$\overline{CS}$ can be asserted (pulled high) after 16 clocks have elapsed. It is necessary not to start the next conversion by pulling $\overline{CS}$ low until the end of the quiet time (t_q) after SDO goes to 3-state. To continue normal operation, it is necessary that $\overline{CS}$ is not pulled high until point **b**. Without this, the device does not enter the acquisition phase and no valid data is available in the next cycle. (Also refer to power down mode for more details.) $\overline{CS}$ going high any time after the conversion start aborts the ongoing conversion and SDO goes to 3-state.

The high level of the digital input to the device is not limited to device V_{DD}. This means the digital input can go as high as 5.25 V when the device supply is 2.35 V. This feature is useful when digital signals are coming from another circuit with different supply levels. Also, this relaxes the restriction on power up sequencing. However, the digital output levels (V_{OH} and V_{OL}) are governed by V_{DD} as listed in the SPECIFICATIONS section.

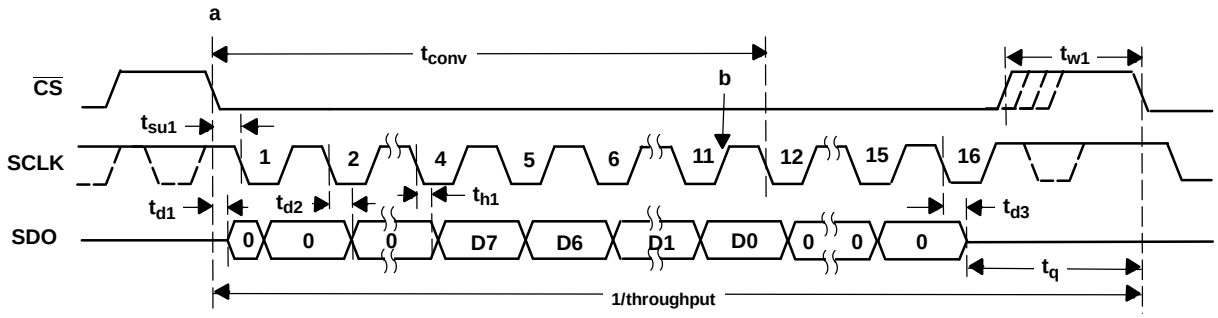

Figure 2. ADS7888 Interface Timing Diagram

As shown in Figure 3, the ADS7888 can achieve 1.5-MSPS throughput. $\overline{CS}$ can be pulled high after the 12th falling edge (with a 25-MHz SCLK). SDO goes to 3-state after the LSB (as $\overline{CS}$ is high). $\overline{CS}$ can be pulled low at the end of the quiet time (t_q) after SDO goes to 3-state.

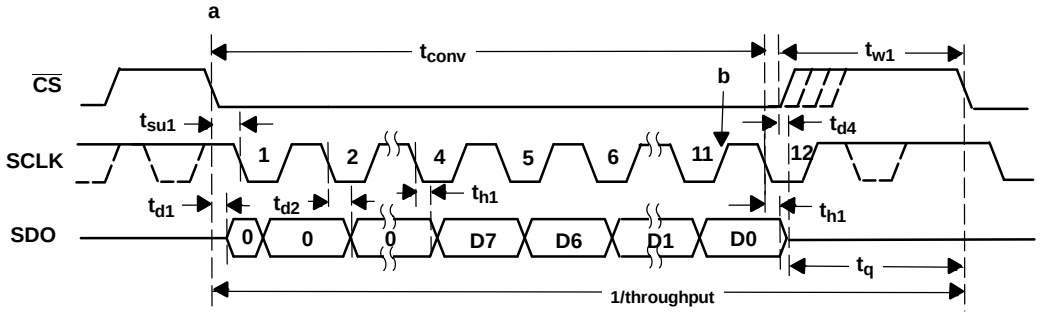

Figure 3. ADS7888 Interface Timing Diagram, Data Transfer with 12-Clock Frame

POWER DOWN MODE

The device enters power down mode if $\overline{CS}$ goes high anytime after the 2nd SCLK falling edge to before the 10th SCLK falling edge. Ongoing conversion stops and SDO goes to 3-state under this power down condition as shown in Figure 4.

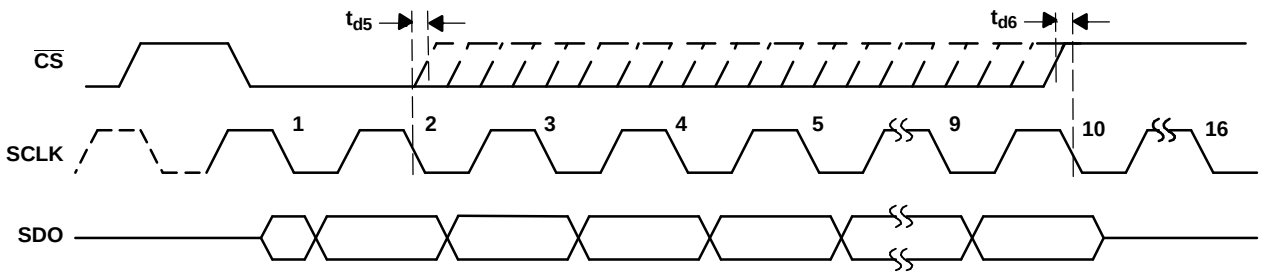

Figure 4. Entering Power Down Mode

A dummy cycle with $\overline{CS}$ low for more than 10 SCLK falling edges brings the device out of power down mode. For the device to come to the fully powered up condition it takes 0.8 µs. $\overline{CS}$ can be pulled high any time after the 10th falling edge as shown in Figure 5. It is not necessary to continue until the 16th clock if the next conversion starts 0.8 µs after $\overline{CS}$ going low of the dummy cycle and the quiet time (t_q) condition is met.

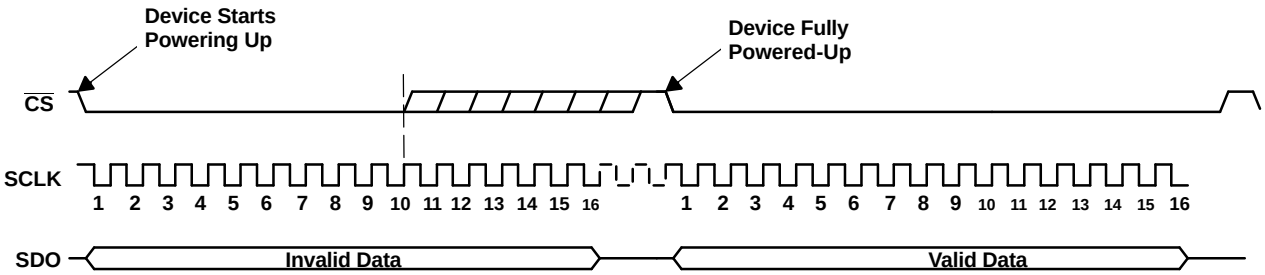

Figure 5. Exiting Power Down Mode

TYPICAL CHARACTERISTICS ADS7887, ADS7888

SUPPLY CURRENT VS SUPPLY VOLTAGE

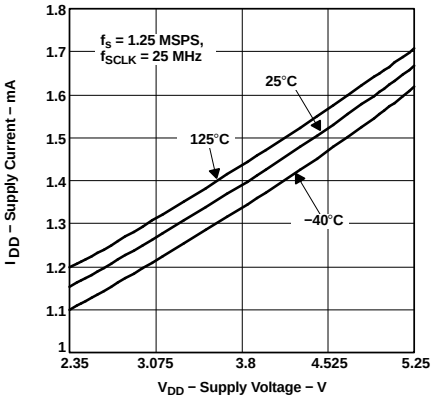

Figure 6.

SUPPLY CURRENT VS SCLK FREQUENCY

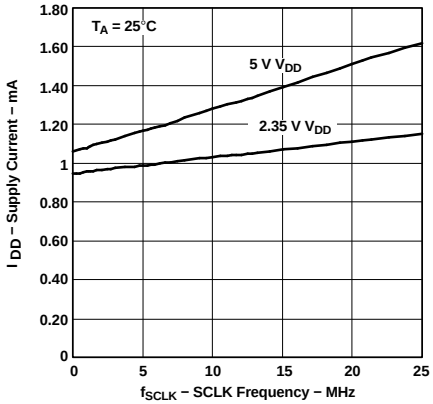

Figure 7.

SUPPLY CURRENT VS SAMPLE RATE

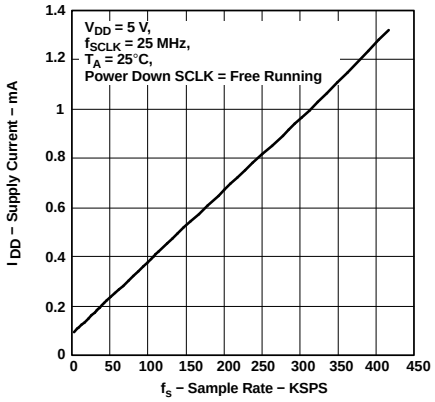

Figure 8.

ANALOG INPUT LEAKAGE CURRENT VS FREE-AIR TEMPERATURE

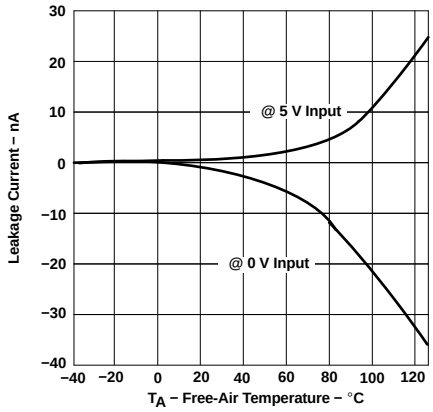

Figure 9.

TYPICAL CHARACTERISTICS ADS7887

SIGNAL-TO-NOISE AND DISTORTION vs INPUT FREQUENCY

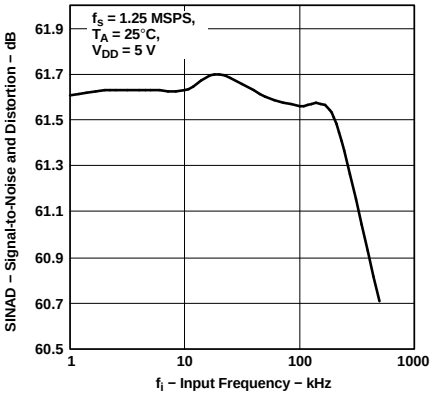

Figure 10.

SIGNAL-TO-NOISE AND DISTORTION vs SUPPLY VOLTAGE

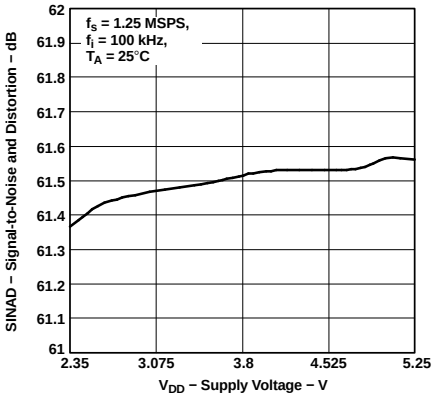

Figure 11.

TOTAL HARMONIC DISTORTION vs INPUT FREQUENCY

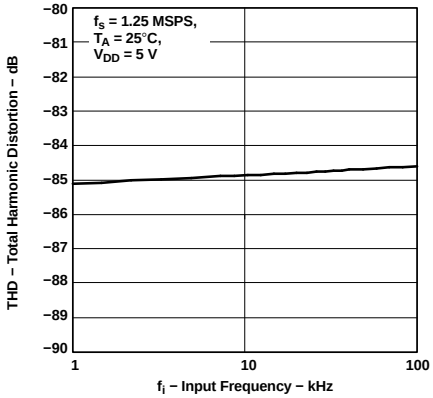

Figure 12.

TOTAL HARMONIC DISTORTION vs SUPPLY VOLTAGE

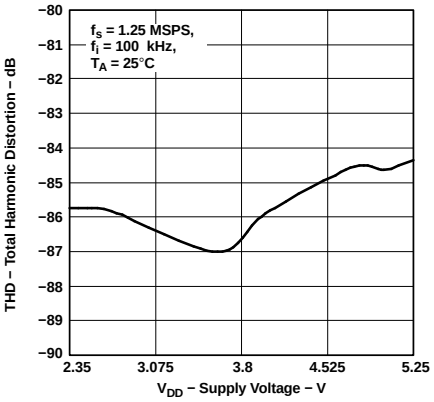

Figure 13.

SPURIOUS FREE DYNAMIC RANGE vs INPUT FREQUENCY

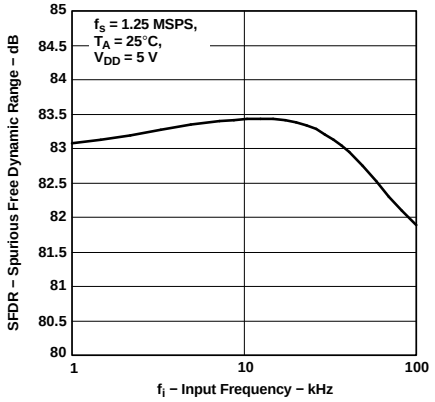

Figure 14.

SPURIOUS FREE DYNAMIC RANGE vs SUPPLY VOLTAGE

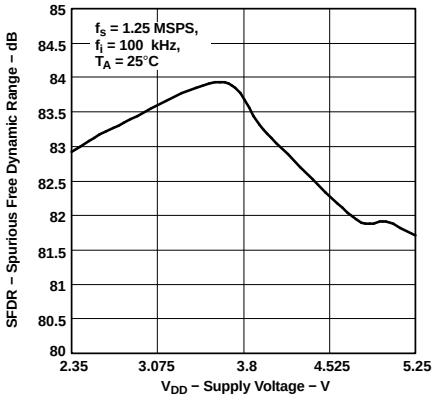

Figure 15.

OFFSET ERROR vs SUPPLY VOLTAGE

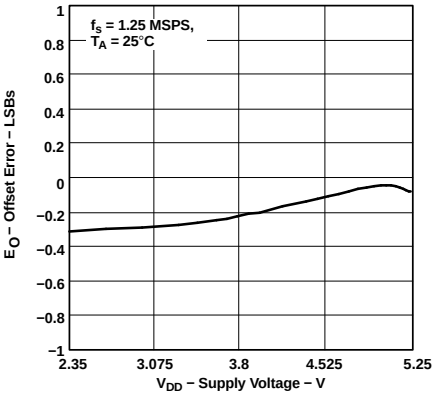

Figure 16.

OFFSET ERROR vs FREE-AIR TEMPERATURE

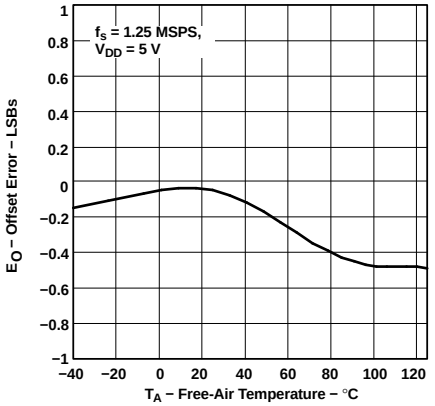

Figure 17.

GAIN ERROR vs SUPPLY VOLTAGE

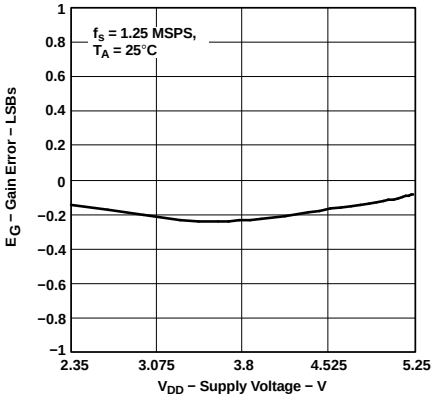

Figure 18.

TYPICAL CHARACTERISTICS ADS7887 (continued)

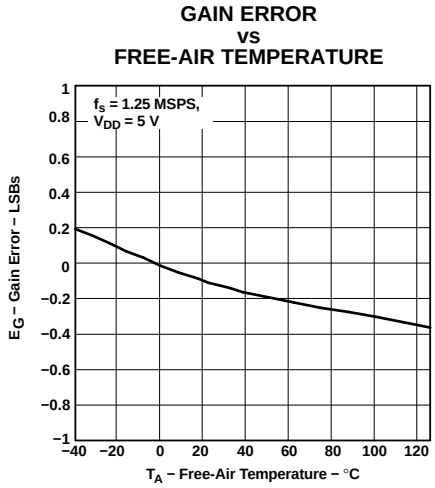

Figure 19.

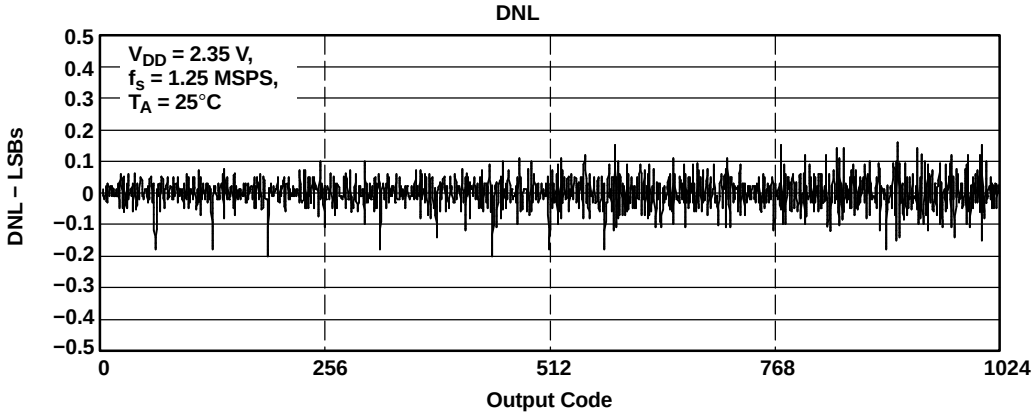

Figure 20.

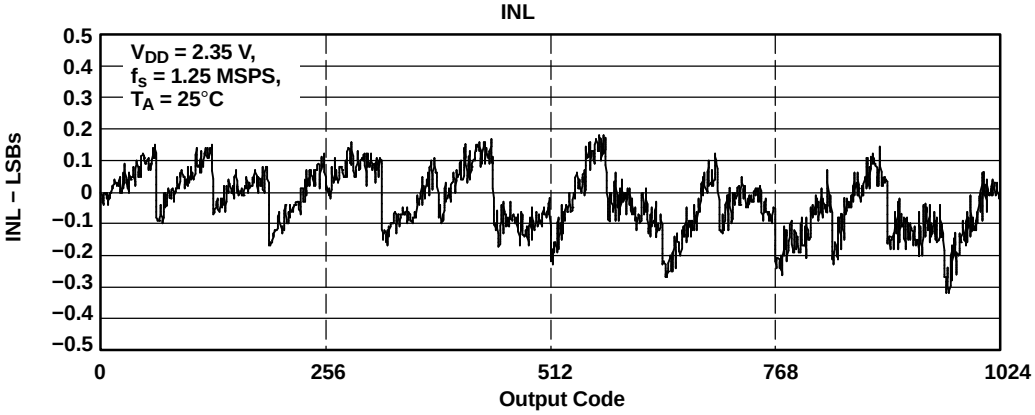

Figure 21.

TYPICAL CHARACTERISTICS ADS7887 (continued)

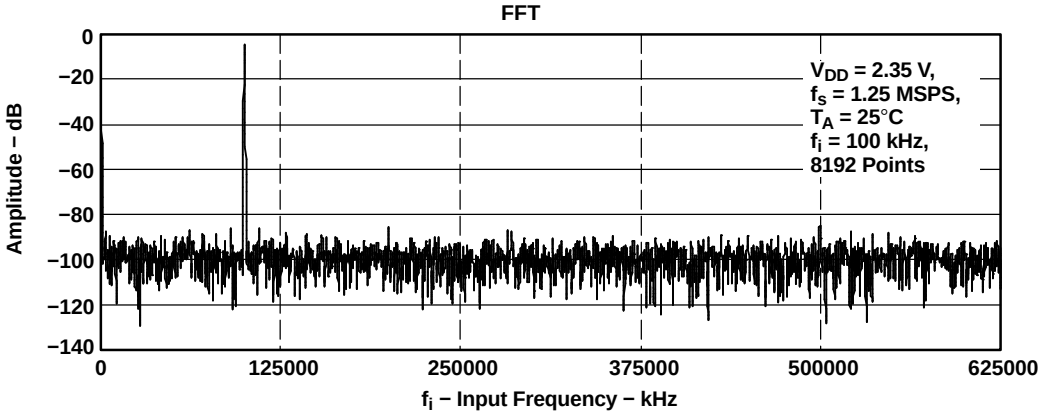

Figure 22.

TYPICAL CHARACTERISTICS ADS7888

SIGNAL-TO-NOISE AND DISTORTION vs INPUT FREQUENCY

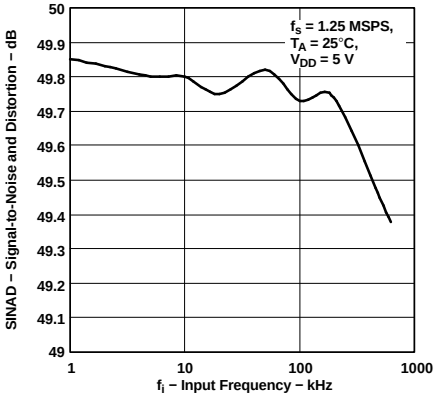

Figure 23.

SIGNAL-TO-NOISE AND DISTORTION vs SUPPLY VOLTAGE

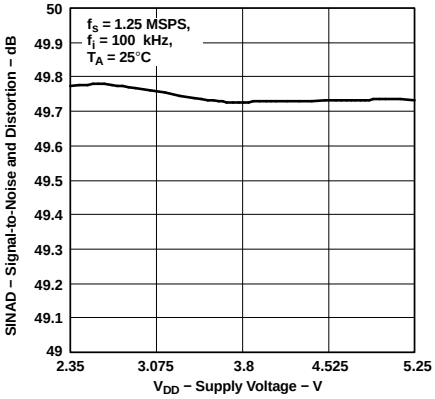

Figure 24.

TOTAL HARMONIC DISTORTION vs INPUT FREQUENCY

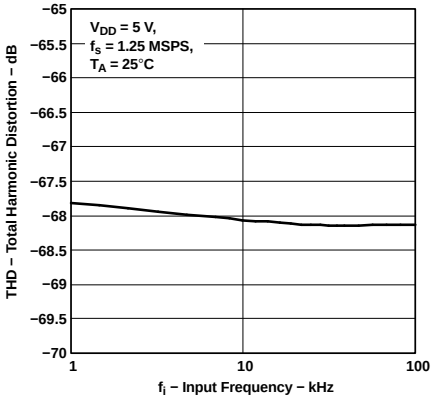

Figure 25.

TOTAL HARMONIC DISTORTION vs SUPPLY VOLTAGE

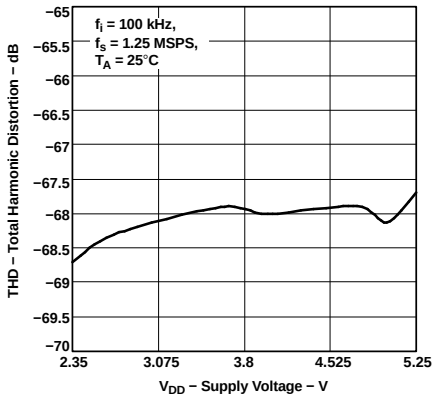

Figure 26.

SPURIOUS FREE DYNAMIC RANGE vs INPUT FREQUENCY

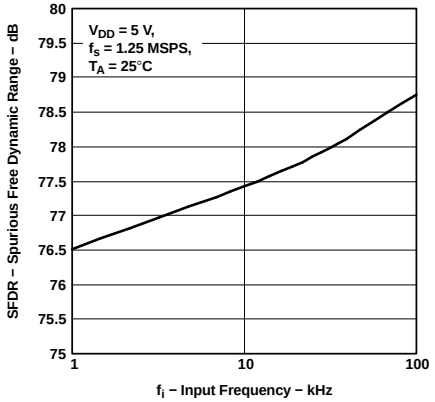

Figure 27.

SPURIOUS FREE DYNAMIC RANGE vs SUPPLY VOLTAGE

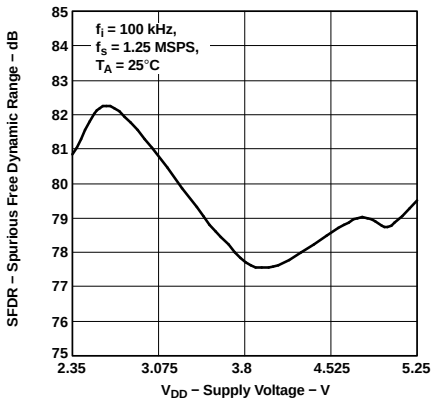

Figure 28.

OFFSET ERROR vs SUPPLY VOLTAGE

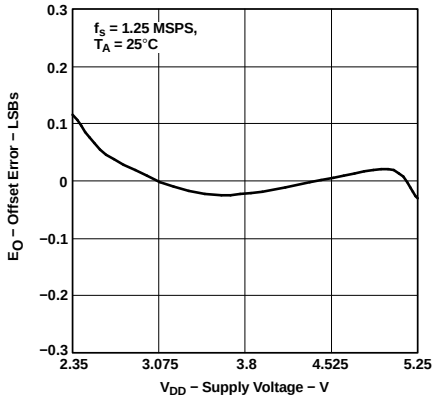

Figure 29.

OFFSET ERROR vs FREE-AIR TEMPERATURE

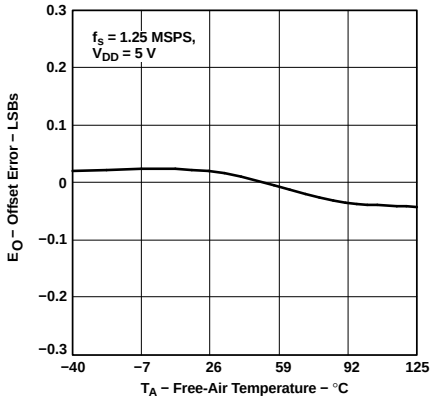

Figure 30.

GAIN ERROR vs SUPPLY VOLTAGE

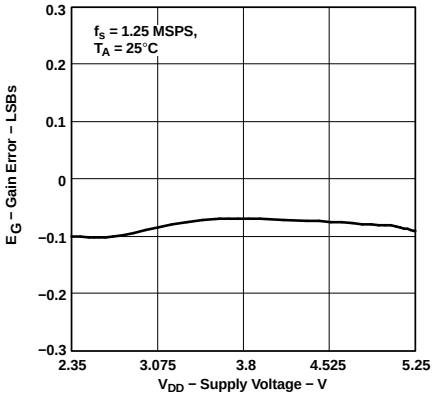

Figure 31.

TYPICAL CHARACTERISTICS ADS7888 (continued)

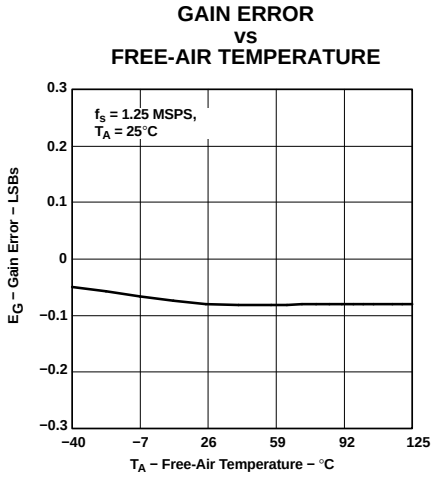

Figure 32.

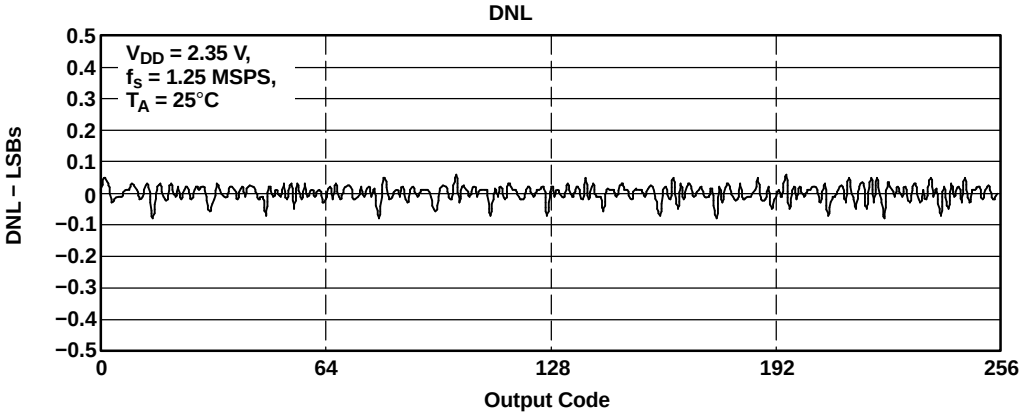

Figure 33.

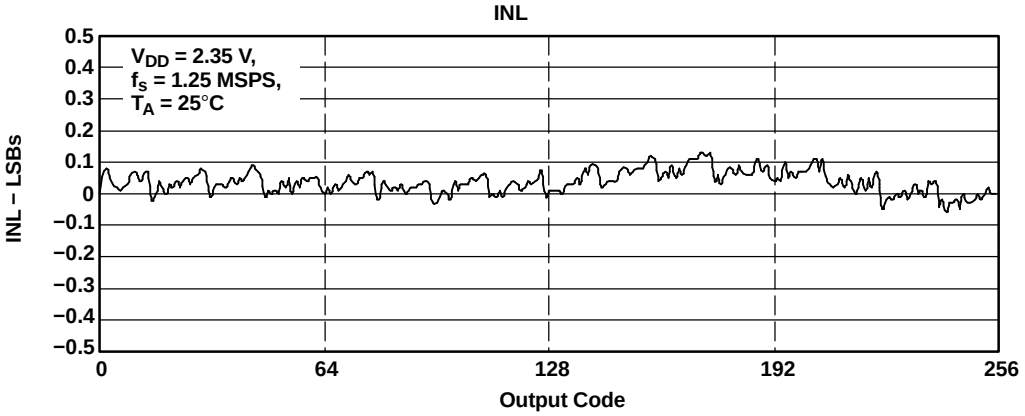

Figure 34.

TYPICAL CHARACTERISTICS ADS7888 (continued)

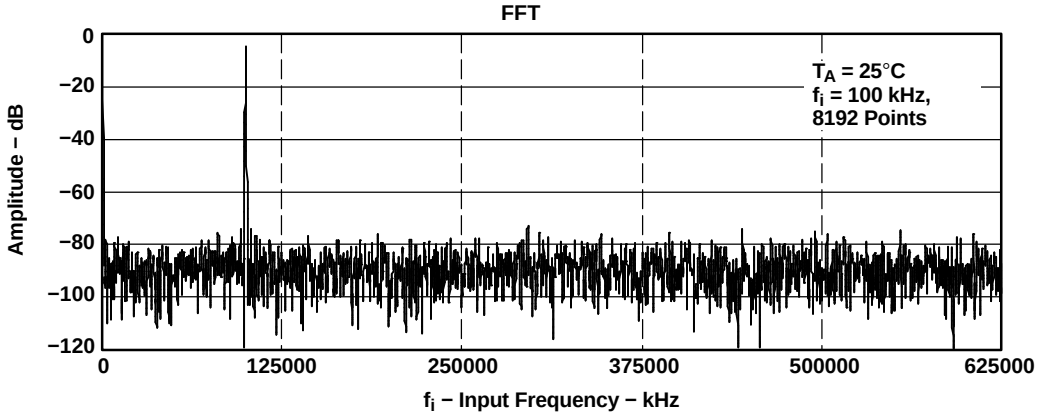

Figure 35.

APPLICATION INFORMATION

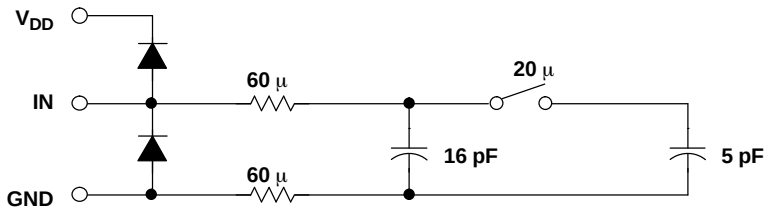

Figure 36. Typical Equivalent Sampling Circuit

Driving the VIN and V_{DD} Pins of the ADS7887 and ADS7888

The VIN input to the ADS7887 and ADS7888 should be driven with a low impedance source. In most cases additional buffers are not required. In cases where the source impedance exceeds 200 Ω, using a buffer would help achieve the rated performance of the converter. The THS4031 is a good choice for the driver amplifier buffer.

The reference voltage for the ADS7887 and ADS7888 A/D converters are derived from the supply voltage internally. The devices offer limited low-pass filtering functionality on-chip. The supply to these converters should be driven with a low impedance source and should be decoupled to the ground. A 1-µF storage capacitor and a 10-nF decoupling capacitor should be placed close to the device. Wide, low impedance traces should be used to connect the capacitor to the pins of the device. The ADS7887 and ADS7888 draw very little current from the supply lines. The supply line can be driven by either:

- Directly from the system supply.
- A reference output from a low drift and low drop out reference voltage generator like REF3030 or REF3130. The ADS7887 and ADS7888 can operate off a wide range of supply voltages. The actual choice of the reference voltage generator would depend upon the system. Figure 38 shows one possible application circuit.
- A low-pass filtered version of the system supply followed by a buffer like the zero-drift OPA735 can also be used in cases where the system power supply is noisy. Care should be taken to ensure that the voltage at the V_{DD} input does not exceed 7 V (especially during power up) to avoid damage to the converter. This can be done easily using single supply CMOS amplifiers like the OPA735. Figure 39 shows one possible application circuit.

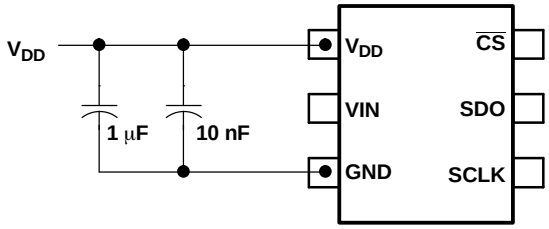

Figure 37. Supply/Reference Decoupling Capacitors

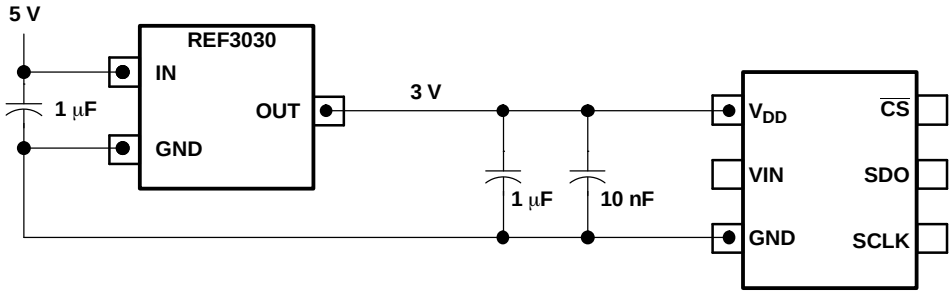

Figure 38. Using the REF3030 Reference

APPLICATION INFORMATION (continued)

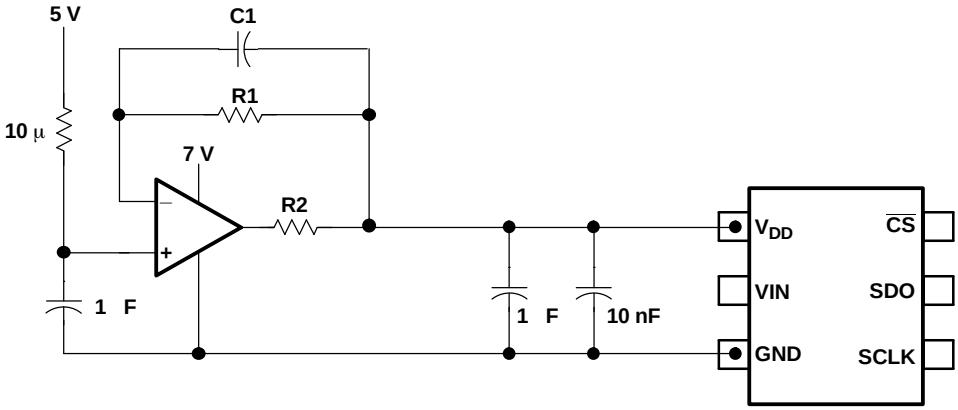

Figure 39. Buffering with the OPA735

PACKAGING INFORMATION

Orderable Device	Status [1]	Package Type	Package Drawing	Pins	Package Qty	Eco Plan [2]	Lead/Ball Finish	MSL Peak Temp [3]
ADS7887SDBVR	ACTIVE	SOT-23	DBV	6	3000	Pb-Free (RoHS Exempt)	CU SN	Level-2-260C-1 YEAR
ADS7887SDBVT	ACTIVE	SOT-23	DBV	6	250	Pb-Free (RoHS Exempt)	CU SN	Level-2-260C-1 YEAR
ADS7887SDBVTG4	ACTIVE	SOT-23	DBV	6		TBD	Call TI	Call TI
ADS7887SDCKR	ACTIVE	SC70	DCK	6	3000	Pb-Free (RoHS Exempt)	CU SN	Level-2-260C-1 YEAR
ADS7887SDCKT	ACTIVE	SC70	DCK	6	250	Pb-Free (RoHS Exempt)	CU SN	Level-2-260C-1 YEAR
ADS7887SDCKTG4	ACTIVE	SC70	DCK	6		TBD	Call TI	Call TI
ADS7888SDBVR	ACTIVE	SOT-23	DBV	6	3000	Pb-Free (RoHS Exempt)	CU SN	Level-2-260C-1 YEAR
ADS7888SDBVT	ACTIVE	SOT-23	DBV	6	250	Pb-Free (RoHS Exempt)	CU SN	Level-2-260C-1 YEAR
ADS7888SDBVTG4	ACTIVE	SOT-23	DBV	6		TBD	Call TI	Call TI
ADS7888SDCKR	ACTIVE	SC70	DCK	6	3000	Pb-Free (RoHS Exempt)	CU SN	Level-2-260C-1 YEAR
ADS7888SDCKT	ACTIVE	SC70	DCK	6	250	Pb-Free (RoHS Exempt)	CU SN	Level-2-260C-1 YEAR
ADS7888SDCKTG4	ACTIVE	SC70	DCK	6		TBD	Call TI	Call TI

[1] The marketing status values are defined as follows:
ACTIVE: Product device recommended for new designs.
LIFEBUY: TI has announced that the device will be discontinued, and a lifetime-buy period is in effect.
NRND: Not recommended for new designs. Device is in production to support existing customers, but TI does not recommend using this part in a new design.
PREVIEW: Device has been announced but is not in production. Samples may or may not be available.
OBSOLETE: TI has discontinued the production of the device.

[2] Eco Plan - The planned eco-friendly classification: Pb-Free (RoHS), Pb-Free (RoHS Exempt), or Green (RoHS & no Sb/Br) - please check http://www.ti.com/productcontent for the latest availability information and additional product content details.
TBD: The Pb-Free/Green conversion plan has not been defined.
Pb-Free (RoHS): TI's terms "Lead-Free" or "Pb-Free" mean semiconductor products that are compatible with the current RoHS requirements for all 6 substances, including the requirement that lead not exceed 0.1% by weight in homogeneous materials. Where designed to be soldered at high temperatures, TI Pb-Free products are suitable for use in specified lead-free processes.
Pb-Free (RoHS Exempt): This component has a RoHS exemption for either 1) lead-based flip-chip solder bumps used between the die and package, or 2) lead-based die adhesive used between the die and leadframe. The component is otherwise considered Pb-Free (RoHS compatible) as defined above.
Green (RoHS & no Sb/Br): TI defines "Green" to mean Pb-Free (RoHS compatible), and free of Bromine (Br) and Antimony (Sb) based flame retardants (Br or Sb do not exceed 0.1% by weight in homogeneous material)

[3] MSL, Peak Temp. -- The Moisture Sensitivity Level rating according to the JEDEC industry standard classifications, and peak solder temperature.

TAPE AND REEL INFORMATION

REEL DIMENSIONS

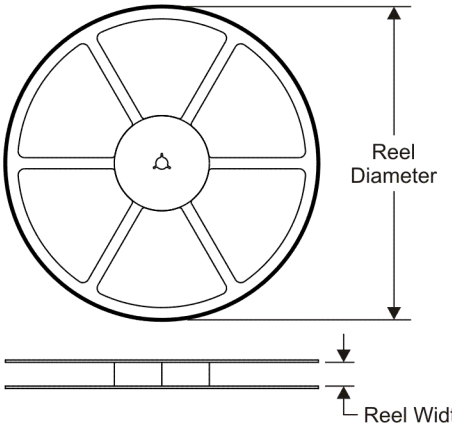

TAPE DIMENSIONS

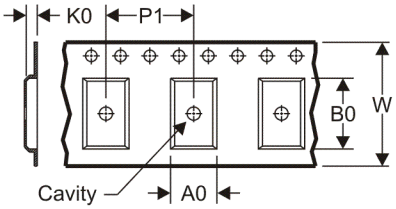

A0	Dimension designed to accommodate the component width
B0	Dimension designed to accommodate the component length
K0	Dimension designed to accommodate the component thickness
W	Overall width of the carrier tape
P1	Pitch between successive cavity centers

QUADRANT ASSIGNMENTS FOR PIN 1 ORIENTATION IN TAPE

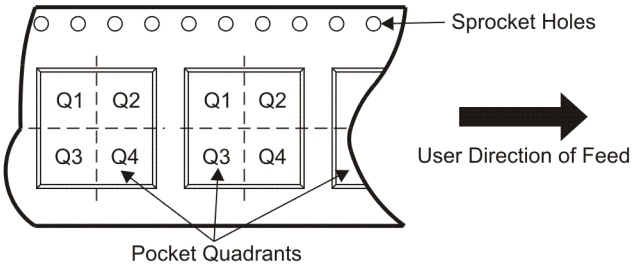

*All dimensions are nominal

Device	Package Type	Package Drawing	Pins	SPQ	Reel Diameter (mm)	Reel Width W1 (mm)	A0 (mm)	B0 (mm)	K0 (mm)	P1 (mm)	W (mm)	Pin1 Quadrant
ADS7887SDBVR	SOT-23	DBV	6	3000	177.8	9.7	3.2	3.1	1.39	4.0	8.0	Q3
ADS7887SDBVT	SOT-23	DBV	6	250	177.8	9.7	3.2	3.1	1.39	4.0	8.0	Q3
ADS7887SDCKR	SC70	DCK	6	3000	177.8	9.7	2.3	2.52	1.2	4.0	8.0	Q3
ADS7887SDCKT	SC70	DCK	6	250	177.8	9.7	2.3	2.52	1.2	4.0	8.0	Q3
ADS7888SDBVR	SOT-23	DBV	6	3000	177.8	9.7	3.2	3.1	1.39	4.0	8.0	Q3
ADS7888SDBVT	SOT-23	DBV	6	250	177.8	9.7	3.2	3.1	1.39	4.0	8.0	Q3
ADS7888SDCKR	SC70	DCK	6	3000	177.8	9.7	2.3	2.52	1.2	4.0	8.0	Q3
ADS7888SDCKT	SC70	DCK	6	250	177.8	9.7	2.3	2.52	1.2	4.0	8.0	Q3

TAPE AND REEL BOX DIMENSIONS

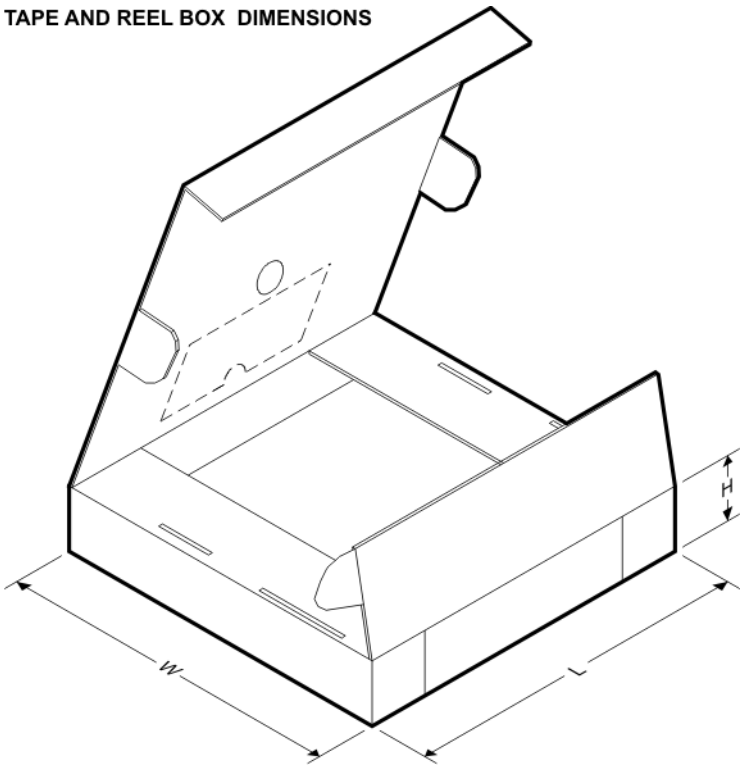

*All dimensions are nominal

Device	Package Type	Package Drawing	Pins	SPQ	Length (mm)	Width (mm)	Height (mm)
ADS7887SDBVR	SOT-23	DBV	6	3000	184.0	184.0	50.0
ADS7887SDBVT	SOT-23	DBV	6	250	184.0	184.0	50.0
ADS7887SDCKR	SC70	DCK	6	3000	184.0	184.0	50.0
ADS7887SDCKT	SC70	DCK	6	250	184.0	184.0	50.0
ADS7888SDBVR	SOT-23	DBV	6	3000	184.0	184.0	50.0
ADS7888SDBVT	SOT-23	DBV	6	250	184.0	184.0	50.0
ADS7888SDCKR	SC70	DCK	6	3000	184.0	184.0	50.0
ADS7888SDCKT	SC70	DCK	6	250	184.0	184.0	50.0

DBV (R–PDSO–G6) PLASTIC SMALL–OUTLINE PACKAGE

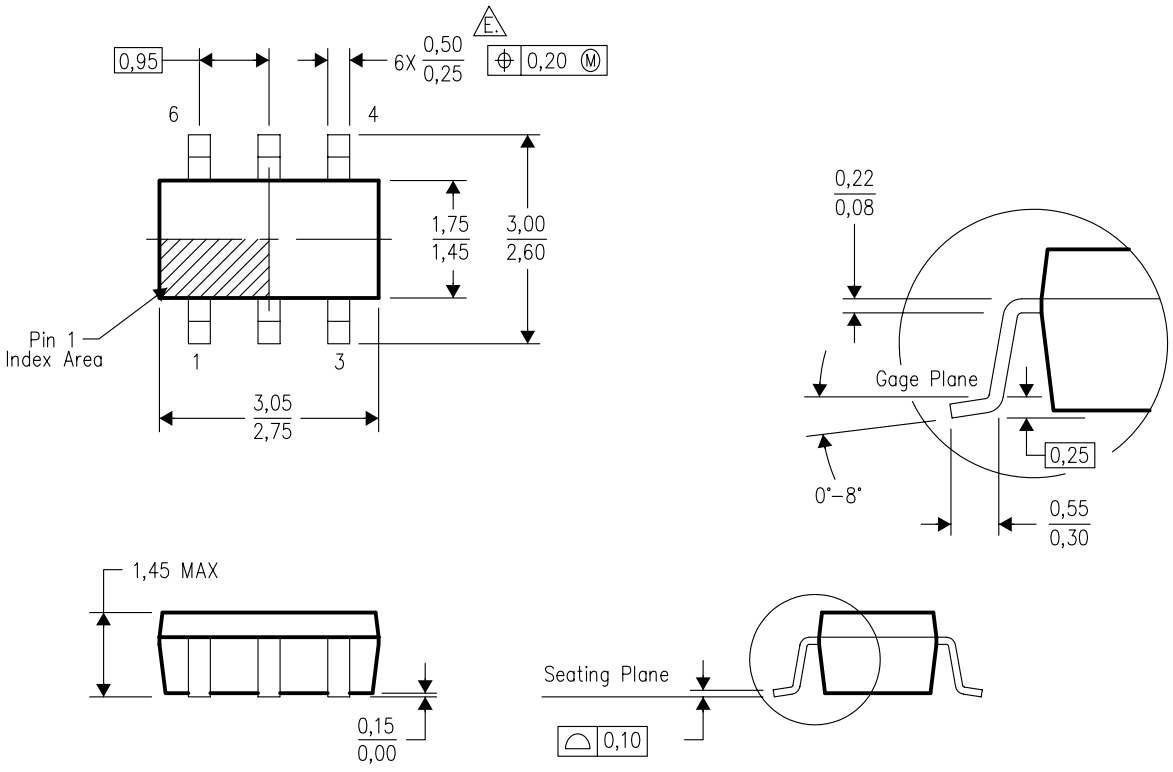

4073253–5/K 03/2006

NOTES:
A. All linear dimensions are in millimeters.
B. This drawing is subject to change without notice.
C. Body dimensions do not include mold flash or protrusion. Mold flash and protrusion shall not exceed 0.15 per side.
D. Leads 1,2,3 may be wider than leads 4,5,6 for package orientation.
E. Falls within JEDEC MO–178 Variation AB, except minimum lead width.

DCK (R–PDSO–G6) PLASTIC SMALL–OUTLINE PACKAGE

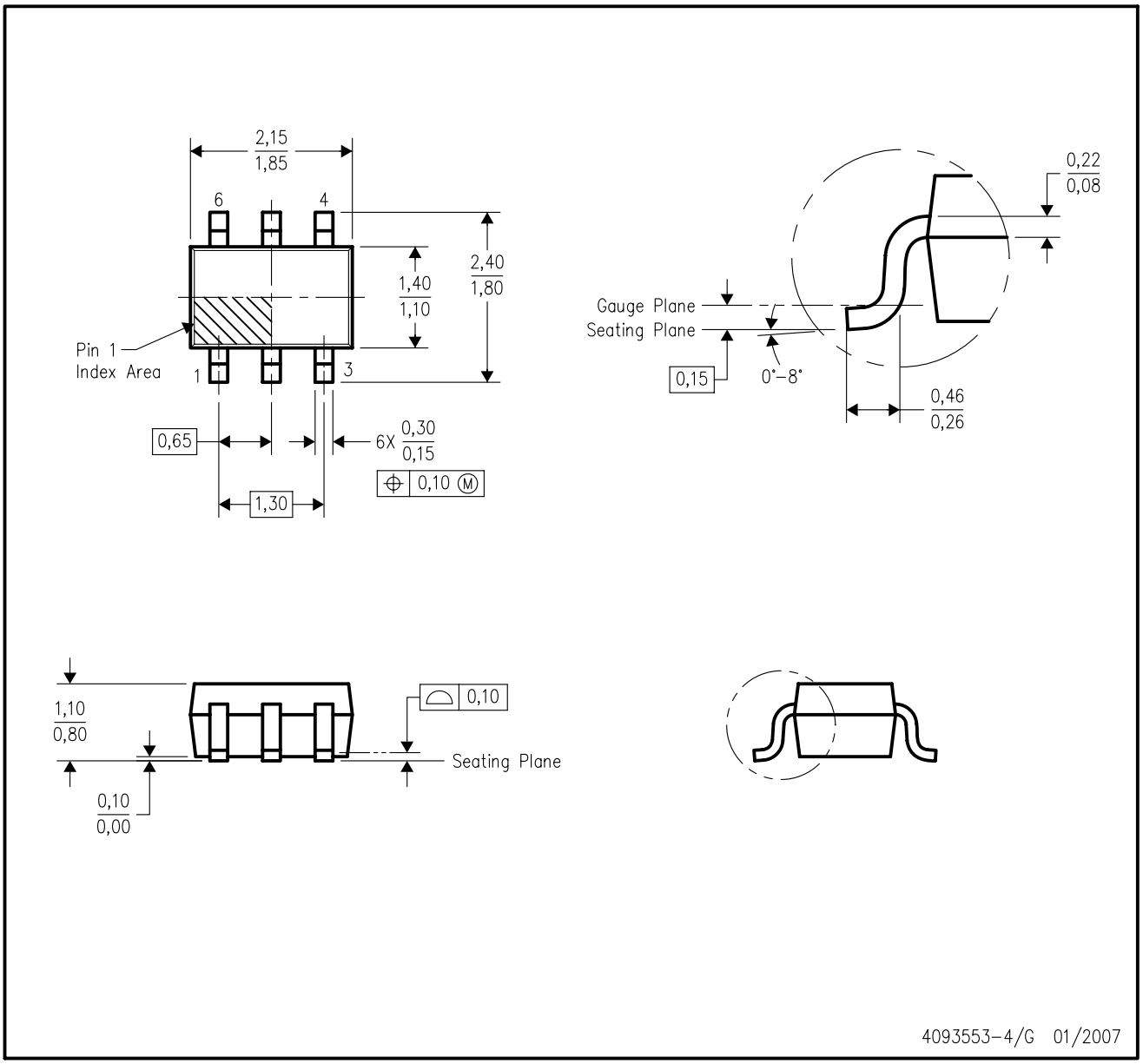

NOTES:
A. All linear dimensions are in millimeters.
B. This drawing is subject to change without notice.
C. Body dimensions do not include mold flash or protrusion. Mold flash and protrusion shall not exceed 0.15 per side.
D. Falls within JEDEC MO–203 variation AB.

DCK (R-PDSO-G6)

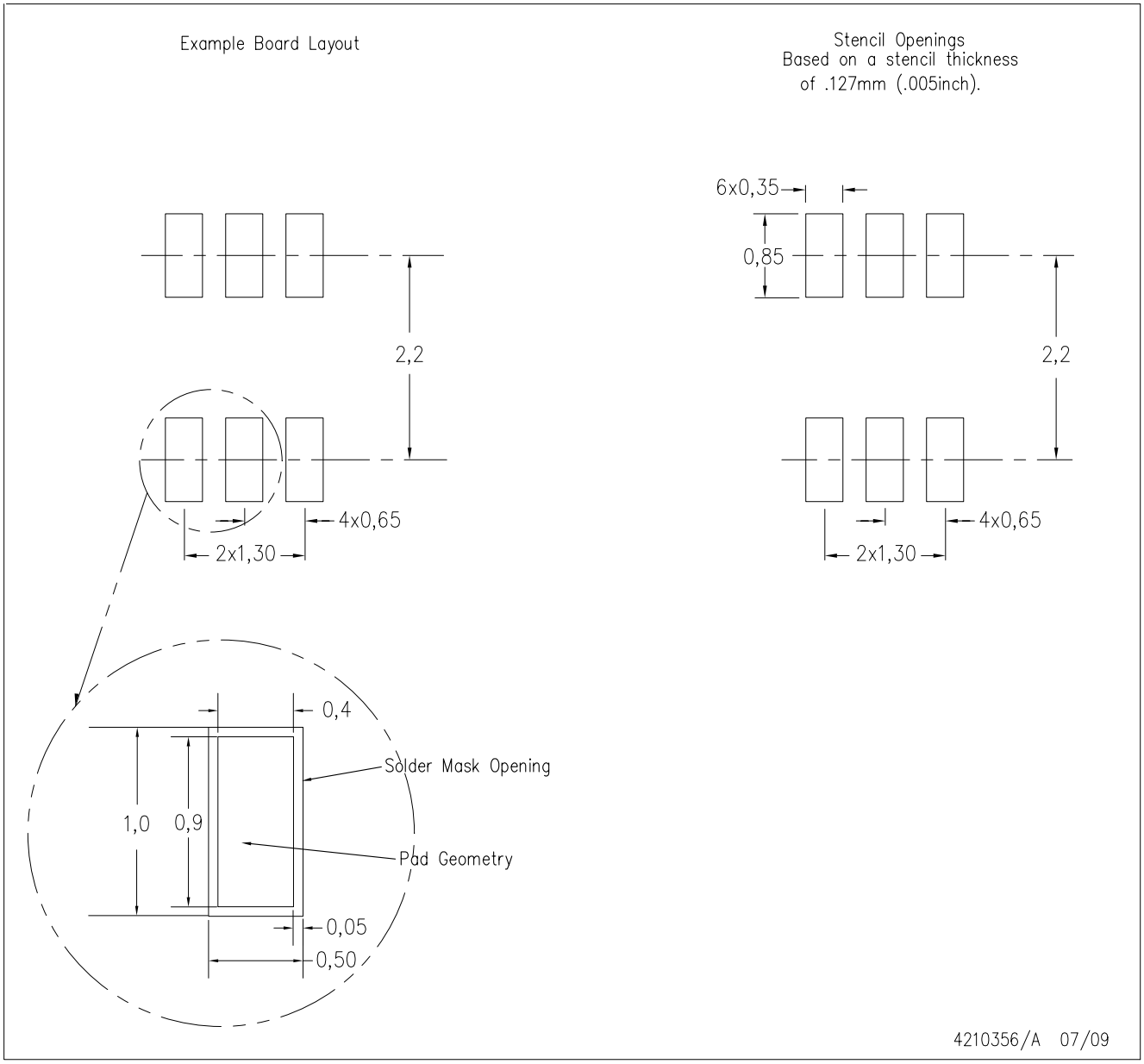

NOTES:
A. All linear dimensions are in millimeters.
B. This drawing is subject to change without notice.
C. Customers should place a note on the circuit board fabrication drawing not to alter the center solder mask defined pad.
D. Publication IPC-7351 is recommended for alternate designs.
E. Laser cutting apertures with trapezoidal walls and also rounding corners will offer better paste release. Customers should contact their board assembly site for stencil design recommendations. Example stencil design based on a 50% volumetric metal load solder paste. Refer to IPC-7525 for other stencil recommendations.