12-Bit, 3µs, 250kHz Sampling A/D Converter

FEATURES

- AD7572 Pinout
- 12-Bit Resolution
- 3µs and 8µs Conversion Times
- On-Chip Sample-and-Hold
- Up to 250kHz Sample Rates
- 5V Single Supply Operation
- No Negative Supply Required
- On-Chip 25ppm/°C Reference
- 75mW (Typ) Power Consumption
- 24-Pin Narrow DIP and SOL Packages
- ESD Protected on All Pins

APPLICATIONS

- High Speed Data Acquisition
- Digital Signal Processing (DSP)
- Multiplexed Data Acquisition Systems
- Single Supply Systems

LT, LTC and LTM are registered trademarks of Linear Technology Corporation.
LTBiCMOS is a trademark of Linear Technology Corporation.
All other trademarks are the property of their respective owners.

DESCRIPTION

The LTC1272 is a 3µs, 12-bit, successive approximation sampling A/D converter. It has the same pinout as the industry standard AD7572 and offers faster conversion time, on-chip sample-and-hold, and single supply operation. It uses LTBiCMOS™ switched-capacitor technology to combine a high speed 12-bit ADC with a fast, accurate sample-and-hold and a precision reference.

The LTC1272 operates with a single 5V supply but can also accept the 5V/–15V supplies required by the AD7572 (Pin 23, the negative supply pin of the AD7572, is not connected on the LTC1272). The LTC1272 has the same 0V to 5V input range as the AD7572 but, to achieve single supply operation, it provides a 2.42V reference output instead of the –5.25V of the AD7572. It plugs in for the AD7572 if the reference capacitor polarity is reversed and a 1µs sample-and-hold acquisition time is allowed between conversions.

The output data can be read as a 12-bit word or as two 8-bit bytes. This allows easy interface to both 8-bit and higher processors. The LTC1272 can be used with a crystal or an external clock and comes in speed grades of 3ms and 8ms.

TYPICAL APPLICATION

Single 5V Supply, 3µs, 12-Bit Sampling ADC

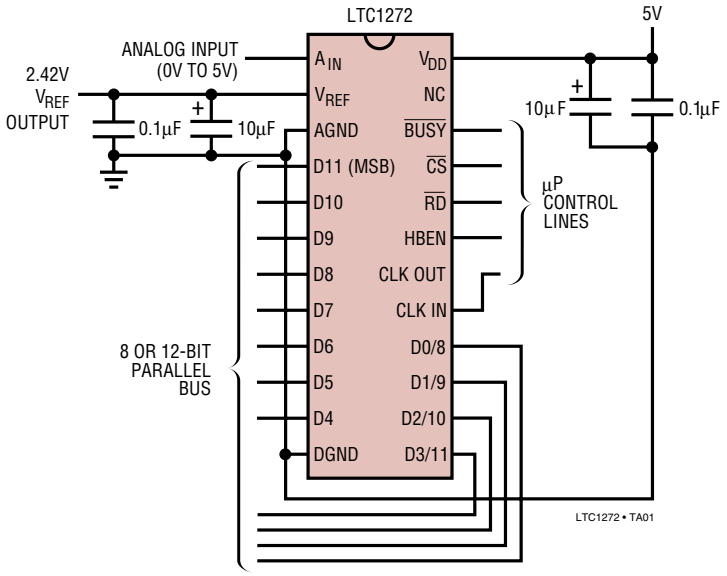

1024 Point FFT, f_S = 250kHz, f_{IN} = 10kHz

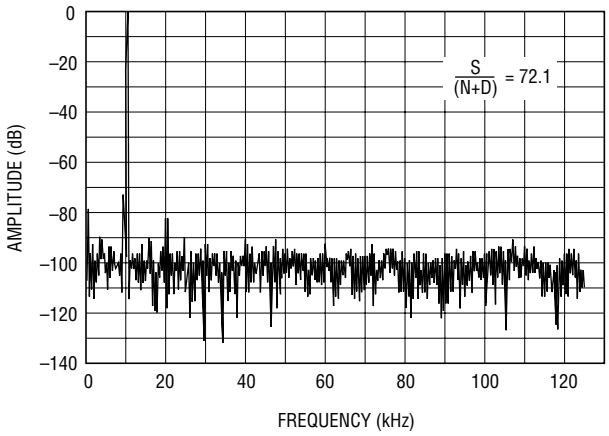

www.BDTIC.com/Linear

ABSOLUTE MAXIMUM RATINGS

(Notes 1 and 2)

Supply Voltage (V_{DD}) 6V
Analog Input Voltage (Note 3) .....–0.3V to 15V
Digital Input Voltage .....–0.3V to 12V
Digital Output Voltage .....–0.3V to V_{DD} + 0.3V
Power Dissipation 500mW

Operating Temperature Range
LTC1272-XAC, CC ..... 0°C to 70°C
Storage Temperature Range ..... –65°C to 150°C
Lead Temperature (Soldering, 10 sec) ..... 300°C

PACKAGE/ORDER INFORMATION

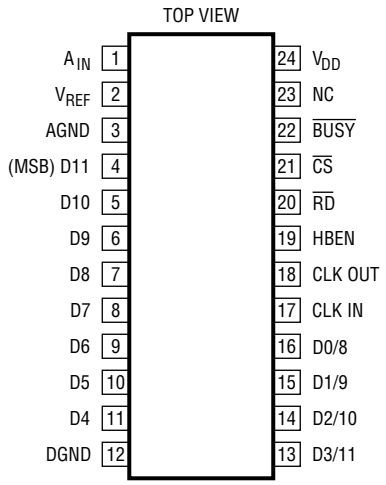

N PACKAGE
24-LEAD PDIP

T_{JMAX} = 110°C, θ_{JA} = 100°C/W

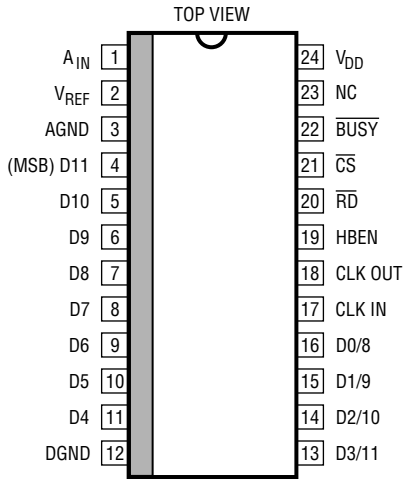

SW PACKAGE
24-LEAD PLASTIC SO WIDE

T_{JMAX} = 110°C, θ_{JA} = 130°C/W

ORDER PART NUMBER	
CONVERSION TIME = 3µs	CONVERSION TIME = 8µs
LTC1272-3ACN LTC1272-3CCN	LTC1272-8ACN LTC1272-8CCN
SW PACKAGE ONLY	
LTC1272-3ACSW LTC1272-3CCSW	LTC1272-8ACSW LTC1272-8CCSW

Order Options Tape and Reel: Add #TR
Lead Free: Add #PBF Lead Free Tape and Reel: Add #TRPBF
Lead Free Part Marking: http://www.linear.com/leadfree/

Consult LTC Marketing for parts specified with wider operating temperature ranges.

CONVERTER CHARACTERISTICS

The ● denotes the specifications which apply over the full operating temperature range, otherwise specifications are at T_A = 25°C. With Internal Reference (Note 4)

PARAMETER	CONDITIONS		LTC1272-XA MIN	LTC1272-XA TYP	LTC1272-XA MAX	LTC1272-XC MIN	LTC1272-XC TYP	LTC1272-XC MAX	UNITS
Resolution (No Missing Codes)		●	12			12			Bits
Integral Linearity Error	(Note 5)	●			±1/2			±1	LSB
Differential Linearity Error		●			±1			±1	LSB
Offset Error					±3			±4	LSB
		●			±4			±6	LSB
Gain Error					±10			±15	LSB
Full-Scale Tempco	I_{OUT} (Reference) = 0	●		±5	±25		±10	±45	ppm/°C

www.BDTIC.com/Linear

INTERNAL REFERENCE CHARACTERISTICS

The ● denotes the specifications which apply over the full operating temperature range, otherwise specifications are at T_A = 25°C. (Note 4)

PARAMETER	CONDITIONS		LTC1272-XA MIN	LTC1272-XA TYP	LTC1272-XA MAX	LTC1272-XC MIN	LTC1272-XC TYP	LTC1272-XC MAX	UNITS
V_{REF} Output Voltage (Note 6)	I_{OUT} = 0		2.400	2.420	2.440	2.400	2.420	2.440	V
V_{REF} Output Tempco	I_{OUT} = 0	●		5	25		10	45	ppm/°C
V_{REF} Line Regulation	4.75V ≤ V_{DD} ≤ 5.25V, I_{OUT} = 0			0.01			0.01		LSB/V
V_{REF} Load Regulation (Sourcing Current)	0 ≤ $\lvert I_{OUT} \rvert$ ≤ 1mA			2			2		LSB/mA

DIGITAL AND DC ELECTRICAL CHARACTERISTICS

The ● denotes the specifications which apply over the full operating temperature range, otherwise specifications are at T_A = 25°C. (Note 4)

SYMBOL	PARAMETER	CONDITIONS		LTC1272-XA/C MIN	LTC1272-XA/C TYP	LTC1272-XA/C MAX	UNITS
V_{IH}	High Level Input Voltage $\overline{CS}$, $\overline{RD}$, HBEN, CLK IN	V_{DD} = 5.25V	●	2.4			V
V_{IL}	Low Level Input Voltage $\overline{CS}$, $\overline{RD}$, HBEN, CLK IN	V_{DD} = 4.75V	●			0.8	V
I_{IN}	Input Current $\overline{CS}$, $\overline{RD}$, HBEN	V_{IN} = 0V to V_{DD}	●			±10	µA
	Input Current CLK IN	V_{IN} = 0V to V_{DD}	●			±20	µA
V_{OH}	High Level Output Voltage All Logic Outputs	V_{DD} = 4.75V I_{OUT} = –10µA			4.7		V
		I_{OUT} = –200µA	●		4.0		V
V_{OL}	Low Level Output Voltage All Logic Outputs	V_{DD} = 4.75V, I_{OUT} = 1.6mA	●			0.4	V
I_{OZ}	High-Z Output Leakage D11-D0/8	V_{OUT} = 0V to V_{DD}	●			±10	µA
C_{OZ}	High-Z Output Capacitance (Note 7)		●			15	pF
I_{SOURCE}	Output Source Current	V_{OUT} = 0V			–10		mA
I_{SINK}	Output Sink Current	V_{OUT} = V_{DD}			10		mA
I_{DD}	Positive Supply Current	$\overline{CS}$ = $\overline{RD}$ = V_{DD}, A_{IN} = 5V	●		15	30	mA
P_D	Power Dissipation				75		mW

DYNAMIC ACCURACY

(Note 4) f_{SAMPLE} = 250kHz (LTC1272-3), 166kHz (LTC1272-5), 111kHz (LTC1272-8)

SYMBOL	PARAMETER	CONDITIONS	LTC1272-XA/C MIN	LTC1272-XA/C TYP	LTC1272-XA/C MAX	UNITS
S/(N + D)	Signal-to-Noise Plus Distortion Ratio	10kHz Input Signal		72		dB
THD	Total Harmonic Distortion (Up to 5th Harmonic)	10kHz Input Signal		–82		dB
	Peak Harmonic or Spurious Noise	10kHz Input Signal		–82		dB

ANALOG INPUT

The ● denotes the specifications which apply over the full operating temperature range, otherwise specifications are at T_A = 25°C. (Note 4)

SYMBOL	PARAMETER	CONDITIONS		LTC1272-XA/B/C MIN	LTC1272-XA/B/C TYP	LTC1272-XA/B/C MAX	UNITS
V_{IN}	Input Voltage Range	4.75V ≤ V_{DD} ≤ 5.25V	●	0		5	V
I_{IN}	Input Current		●			3.5	mA
C_{IN}	Input Capacitance				50		pF
t_{ACQ}	Sample-and-Hold Acquisition Time		●		0.45	1	µs

www.BDTIC.com/Linear

TIMING CHARACTERISTICS

The ● denotes the specifications which apply over the full operating temperature range, otherwise specifications are at T_A = 25°C. (Note 8)

SYMBOL	PARAMETER	CONDITIONS		LTC1272-XA/C MIN	TYP	MAX	UNITS
t_1	$\overline{CS}$ to $\overline{RD}$ Setup Time		●	0			ns
t_2	$\overline{RD}$ to $\overline{BUSY}$ Delay	C_L = 50pF			80	190	ns
		COM Grade	●			230	ns
t_3	Data Access Time After $\overline{RD}$↓	C_L = 20pF			50	90	ns
		COM Grade	●			110	ns
		C_L = 100pF			70	125	ns
		COM Grade	●			150	ns
t_4	$\overline{RD}$ Pulse Width			t_3			ns
		COM Grade	●	t_3			ns
t_5	$\overline{CS}$ to $\overline{RD}$ Hold Time		●	0			ns
t_6	Data Setup Time After $\overline{BUSY}$				40	70	ns
		COM Grade	●			90	ns
t_7	Bus Relinquish Time			20	30	75	ns
		COM Grade	●	20		85	ns
t_8	HBEN to $\overline{RD}$ Setup Time		●	0			ns
t_9	HBEN to $\overline{RD}$ Hold Time		●	0			ns
t_{10}	Delay Between $\overline{RD}$ Operations		●	200			ns
t_{11}	Delay Between Conversions			1			µs
t_{12}	Aperture Delay of Sample and Hold	Jitter <50ps			25		ns
t_{13}	CLK to $\overline{BUSY}$ Delay				80	170	ns
		COM Grade	●			220	ns
t_{CONV}	Conversion Time		●	12		13	CLK CYCLES

Note 1: Stresses beyond those listed under Absolute Maximum Ratings may cause permanent damage to the device. Exposure to any Absolute Maximum Rating condition for extended periods may affect device reliability and lifetime.

Note 2: All voltage values are with respect to ground with DGND and AGND wired together, unless otherwise noted.

Note 3: When the analog input voltage is taken below ground it will be clamped by an internal diode. This product can handle, with no external diode, input currents of greater than 60mA below ground without latch-up.

Note 4: V_{DD} = 5V, f_{CLK} = 4MHz for LTC1272-3, and 1.6MHz for LTC1272-8, $t_r = t_f$ = 5ns unless otherwise specified. For best analog performance, the LTC1272 clock should be synchronized to the $\overline{RD}$ and $\overline{CS}$ control inputs with at least 40ns separating convert start from the nearest clock edge.

Note 5: Linearity error is specified between the actual end points of the A/D transfer curve.

Note 6: The LTC1272 has the same 0V to 5V input range as the AD7572 but, to achieve single supply operation, it provides a 2.42V reference output instead of the –5.25V of the AD7572. This requires that the polarity of the reference bypass capacitor be reversed when plugging an LTC1272 into an AD7572 socket.

Note 7: Guaranteed by design, not subject to test.

Note 8: V_{DD} = 5V. Timing specifications are sample tested at 25°C to ensure compliance. All input control signals are specified with $t_r = t_f$ = 5ns (10% to 90% of 5V) and timed from a voltage level of 1.6V. See Figures 13 through 17.

www.BDTIC.com/Linear

PIN FUNCTIONS

A_{IN} (Pin 1): Analog Input, 0V to 5V Unipolar Input.

V_{REF} (Pin 2): 2.42V Reference Output. When plugging into an AD7572 socket, reverse the reference bypass capacitor polarity and short the 10Ω series resistor.

AGND (Pin 3): Analog Ground.

D11 to D4 (Pins 4-11): Three-State Data Outputs.

DGND (Pin 12): Digital Ground.

D3/11 to D0/8 (Pins 13-16): Three-State Data Outputs.

CLK IN (Pin 17): Clock Input. An external TTL/CMOS compatible clock may be applied to this pin or a crystal can be connected between CLK IN and CLK OUT.

CLK OUT (Pin 18): Clock Output. An inverted CLK IN signal appears at this pin.

HBEN (Pin 19): High Byte Enable Input. This pin is used to multiplex the internal 12-bit conversion result into the lower bit outputs (D7 to D0/8). See table below. HBEN also disables conversion starts when HIGH.

$\overline{RD}$ (Pin 20): Read Input. This active low signal starts a conversion when $\overline{CS}$ and HBEN are low. $\overline{RD}$ also enables the output drivers when $\overline{CS}$ is low.

$\overline{CS}$ (Pin 21): The Chip Select Input must be low for the ADC to recognize $\overline{RD}$ and HBEN inputs.

$\overline{BUSY}$ (Pin 22): The $\overline{BUSY}$ Output is low when a conversion is in progress.

NC (Pin 23): Not Connected Internally. The LTC1272 does not require negative supply. This pin can accommodate the –15V required by the AD7572 without problems.

V_{DD} (Pin 24): Positive Supply, 5V.

Data Bus Output, $\overline{CS}$ and $\overline{RD}$ = LOW

	Pin 4	Pin 5	Pin 6	Pin 7	Pin 8	Pin 9	Pin 10	Pin 11	Pin 13	Pin 14	Pin 15	Pin 16
MNEMONIC*	D11	D10	D9	D8	D7	D6	D5	D4	D3/11	D2/10	D1/9	D0/8
HBEN = LOW	DB11	DB10	DB9	DB8	DB7	DB6	DB5	DB4	DB3	DB2	DB1	DB0
HBEN = HIGH	DB11	DB10	DB9	DB8	LOW	LOW	LOW	LOW	DB11	DB10	DB9	DB8

*D11...D0/8 are the ADC data output pins.
DB11...DB0 are the 12-bit conversion results, DB11 is the MSB.

TYPICAL PERFORMANCE CHARACTERISTICS

Integral Nonlinearity

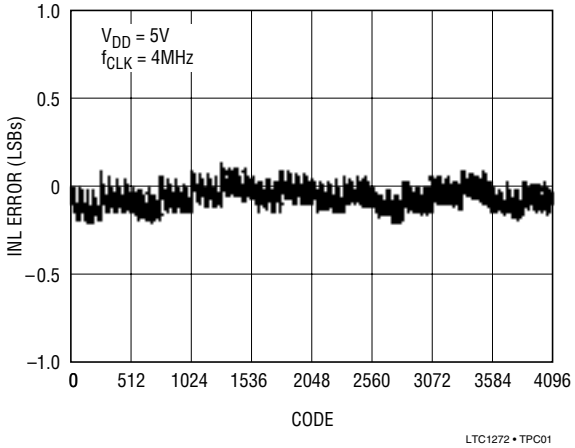

www.BDTIC.com/Linear

TYPICAL PERFORMANCE CHARACTERISTICS

Differential Nonlinearity

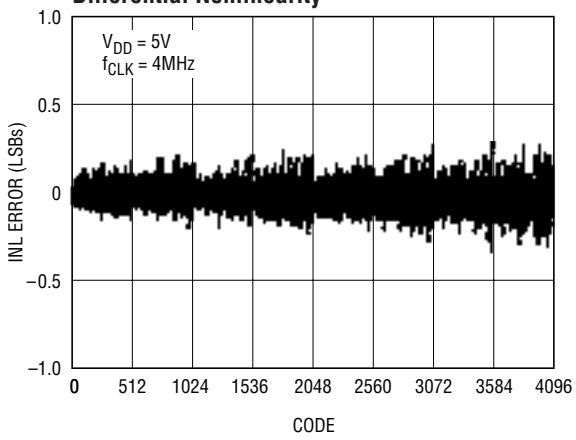

LTC1272 • TPC02

V_{DD} Supply Current vs Temperature

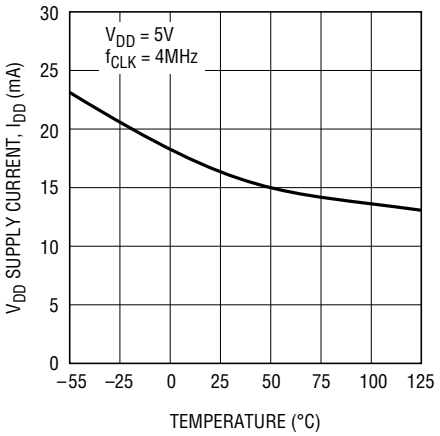

LT1272 • TPC03

Minimum Clock Frequency vs Temperature

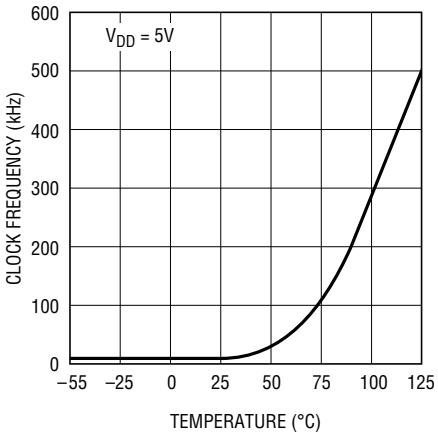

LT1272 • TPC04

Maximum Clock Frequency vs Temperature

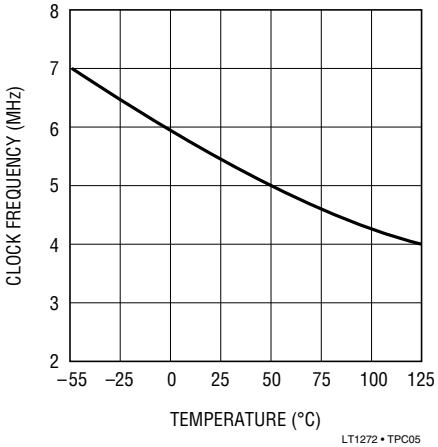

LT1272 • TPC05

V_{REF} vs I_{LOAD} (mA)

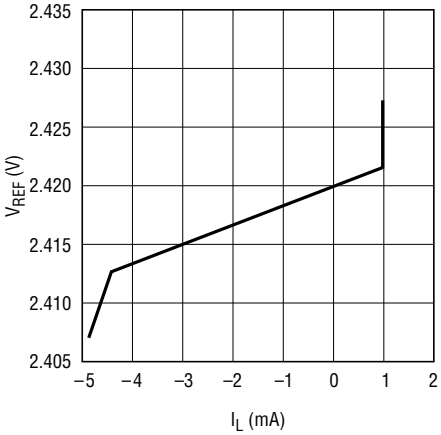

LT1272 • TPC06

LTC1272 ENOBs* vs Frequency

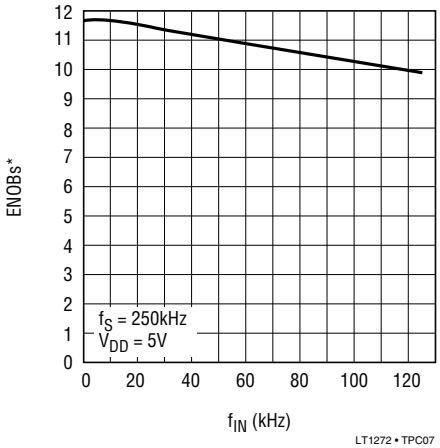

LT1272 • TPC07

$$\text{*EFFECTIVE NUMBER OF BITS, ENOBs} = \frac{S/(N + D) - 1.76\text{dB}}{6.02}$$

www.BDTIC.com/Linear

APPLICATIONS INFORMATION

Conversion Details

Conversion start is controlled by the $\overline{CS}$, $\overline{RD}$ and HBEN inputs. At the start of conversion the successive approximation register (SAR) is reset and the three-state data outputs are enabled. Once a conversion cycle has begun it cannot be restarted.

During conversion, the internal 12-bit capacitive DAC output is sequenced by the SAR from the most significant bit (MSB) to the least significant bit (LSB). Referring to Figure 1, the A_{IN} input connects to the sample-and-hold capacitor through a 300Ω/2.7kΩ divider. The voltage divider allows the LTC1272 to convert 0V to 5V input signals while operating from a 4.5V supply. The conversion has two phases: the sample phase and the convert phase. During the sample phase, the comparator offset is nulled by the feedback switch and the analog input is stored as a charge on the sample-and-hold capacitor, C_{SAMPLE}. This phase lasts from the end of the previous conversion until the next conversion is started. A minimum delay between conversions (t_{10}) of 1µs allows enough time for the analog input to be acquired. During the convert phase, the comparator feedback switch opens, putting the comparator into the compare mode. The sample-and-hold capacitor is switched to ground injecting the analog input charge onto the comparator summing junction. This input charge is successively compared to binary weighted charges supplied by the capacitive DAC. Bit decisions are made by the comparator (zero crossing detector) which checks the addition of each successive weighted bit from the DAC output. The MSB decision is made 50ns (typically) after the second falling edge of CLK IN following a conversion start. Similarly, the succeeding bit decisions are made approximately 50ns after a CLK IN edge until the conversion is finished. At the end of a conversion, the DAC output balances the A_{IN} output charge. The SAR contents (12-bit data word) which represent the A_{IN} input signal are loaded into a 12-bit latch.

Sample-and-Hold and Dynamic Performance

Traditionally A/D converters have been characterized by such specs as offset and full-scale errors, integral nonlinearity and differential nonlinearity. These specs are useful for characterizing an ADC's DC or low frequency signal performance.

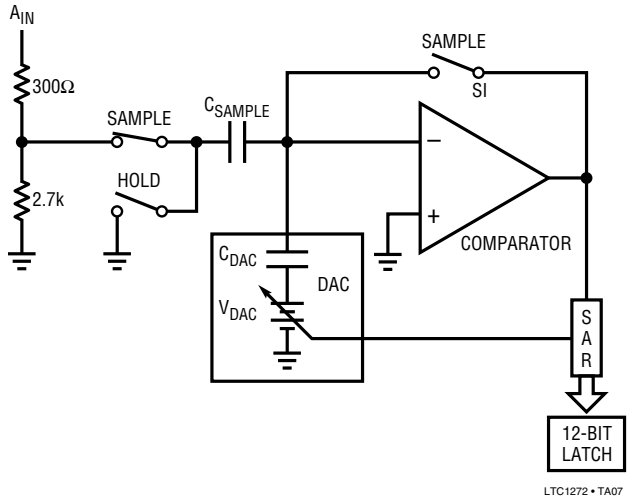

Figure 1. A_{IN} Input

These specs alone are not adequate to fully specify the LTC1272 because of its high speed sampling ability. FFT (Fast Fourrier Transform) test techniques are used to characterize the LTC1272's frequency response, distortion and noise at the rated throughput.

By applying a low distortion sine wave and analyzing the digital output using a FFT algorithm, the LTC1272's spectral content can be examined for frequencies outside the fundamental. Figure 2 shows a typical LTC1272 FFT plot.

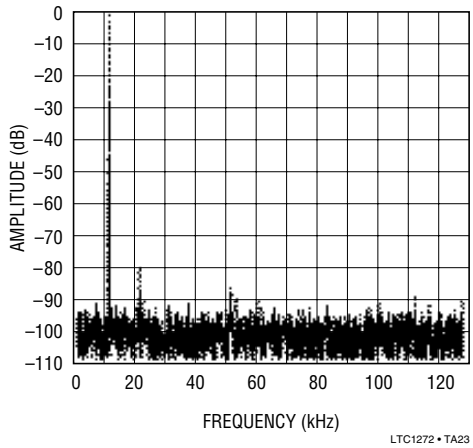

Figure 2. LTC1272 Non-Averaged, 1024 Point FFT Plot. f_S = 250kHz, f_{IN} = 10kHz

www.BDTIC.com/Linear

APPLICATIONS INFORMATION

Signal-to-Noise Ratio

The Signal-to-Noise Ratio (SNR) is the ratio between the RMS amplitude of the fundamental input frequency to the RMS amplitude of all other frequency components at the A/D output. This includes distortion as well as noise products and for this reason it is sometimes referred to as Signal-to-Noise + Distortion [S/(N + D)]. The output is band limited to frequencies from DC to one half the sampling frequency. Figure 2 shows spectral content from DC to 125kHz which is 1/2 the 250kHz sampling rate.

Effective Number of Bits

The effective number of bits (ENOBs) is a measurement of the resolution of an A/D and is directly related to the S/(N + D) by the equation:

$$N = [S/(N + D) - 1.76]/6.02,$$

where N is the effective number of bits of resolution and S/(N + D) is expressed in dB. At the maximum sampling rate of 250kHz the LTC1272 maintains 11.5 ENOBs or better to 20kHz. Above 20kHz the ENOBs gradually decline, as shown in Figure 3, due to increasing second harmonic distortion. The noise floor remains approximately 90dB. The dynamic differential nonlinearity remains good out to 120kHz as shown in Figure 4.

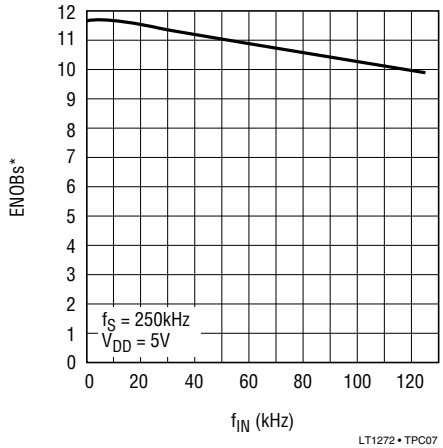

Figure 3. LTC1272 Effective Number of Bits (ENOBs) vs Input Frequency. f_S = 250kHz

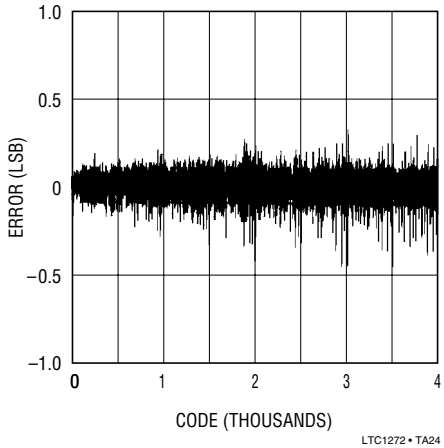

Figure 4. LTC1272 Dynamic DNL. f_{CLK} = 4MHz, f_S = 250kHz, f_{IN} = 122.25342kHz, V_{CC} = 5V

Total Harmonic Distortion

Total Harmonic Distortion (THD) is the ratio of the RMS sum of all harmonics of the input signal to the fundamental itself. The harmonics are limited to the frequency band between DC and one half the sampling frequency. THD is expressed as: 20 LOG $[\sqrt{V_2^2 + V_3^2 + ... + V_N^2} / V_1]$ where V_1 is the RMS amplitude of the fundamental frequency and V_2 through V_N are the amplitudes of the second through Nth harmonics.

Clock and Control Synchronization

For best analog performance, the LTC1272 clock should be synchronized to the $\overline{CS}$ and $\overline{RD}$ control inputs as shown in Figure 5, with at least 40ns separating convert start from the nearest CLK IN edge. This ensures that transitions at CLK IN and CLK OUT do not couple to the analog input and get sampled by the sample-and-hold. The magnitude of this feedthrough is only a few millivolts, but if CLK and convert start ($\overline{CS}$ and $\overline{RD}$) are asynchronous, frequency components caused by mixing the clock and convert signals may increase the apparent input noise.

When the clock and convert signals are synchronized, small endpoint errors (offset and full-scale) are the most that can be generated by clock feedthrough. Even these errors (which can be trimmed out) can be eliminated by ensuring that the start of a conversion ($\overline{CS}$ and $\overline{RD}$'s falling edge) does not occur within 40ns of a clock edge, as in

www.BDTIC.com/Linear

APPLICATIONS INFORMATION

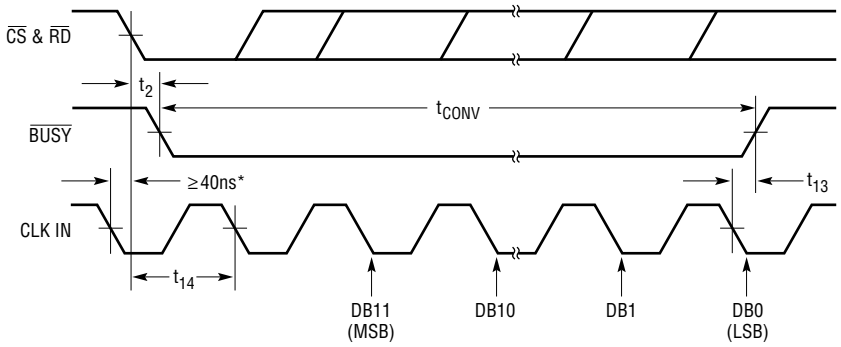

UNCERTAIN CONVERSION TIME FOR 30ns < t_{14} < 180ns

*THE LTC1272 IS ALSO COMPATIBLE WITH THE AD7572 SYNCHRONIZATION MODES.

LTC1272 • TA06

Figure 5. $\overline{RD}$ and CLK IN for Synchronous Operation

Figure 5. Nevertheless, even without observing this guideline, the LTC1272 is still compatible with AD7572 synchronization modes, with no increase in linearity error. This means that either the falling or rising edge of CLK IN may be near $\overline{RD}$'s falling edge.

Driving the Analog Input

The analog input of the LTC1272 is much easier to drive than that of the AD7572. The input current is not modulated by the DAC as in the AD7572. It has only one small current spike from charging the sample-and-hold capacitor at the end of the conversion. During the conversion the analog input draws only DC current. The only requirement is that the amplifier driving the analog input must settle after the small current spike before the next conversion is started. Any op amp that settles in 1µs to small current transients will allow maximum speed operation. If slower op amps are used, more settling time can be provided by increasing the time between conversions. Suitable devices capable of driving the LTC1272 A_{IN} input include the LT1006 and LT1007 op amps.

Internal Clock Oscillator

Figure 6 shows the LTC1272 internal clock circuit. A crystal or ceramic resonator may be connected between CLK IN (Pin 17) and CLK OUT (Pin 18) to provide a clock oscillator for ADC timing. Alternatively the crystal/resonator may be omitted and an external clock source may be

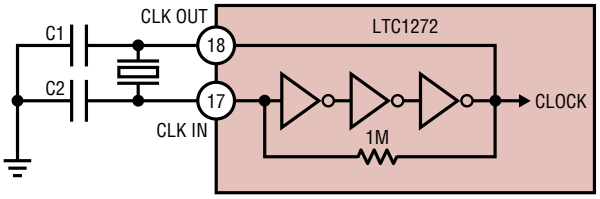

NOTES:
LTC1272-3 – 4MHz CRYSTAL/CERAMIC RESONATOR
LTC1272-8 – 1.6MHz CRYSTAL/CERAMIC RESONATOR

LTC1272 • TA09

Figure 6. LTC1272 Internal Clock Circuit

connected to CLK IN. For an external clock the duty cycle is not critical. An inverted CLK IN signal will appear at the CLK OUT pin as shown in the operating waveforms of Figure 7. Capacitance on the CLK OUT pin should be minimized for best analog performance.

Internal Reference

The LTC1272 has an on-chip, temperature compensated, curvature corrected, bandgap reference, which is factory trimmed to 2.42V ±1%. It is internally connected to the DAC and is also available at pin 2 to provide up to 1mA current to an external load.

For minimum code transition noise the reference output should be decoupled with a capacitor to filter wideband noise from the reference (10µF tantalum in parallel with a 0.1µF ceramic). A simplified schematic of the reference with its recommended decoupling is shown in Figure 8.

www.BDTIC.com/Linear

APPLICATIONS INFORMATION

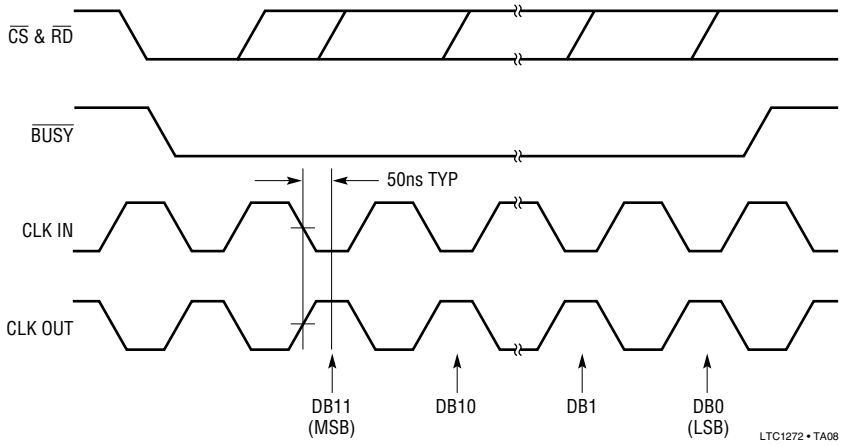

Figure 7. Operating Waveforms Using an External Clock Source for CLK IN

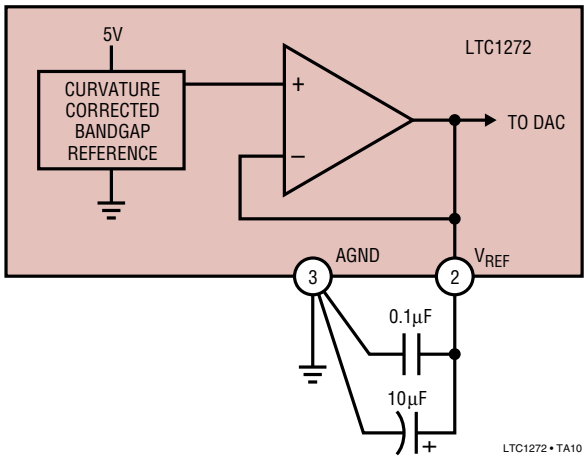

Figure 8. LTC1272 Internal 2.42V Reference

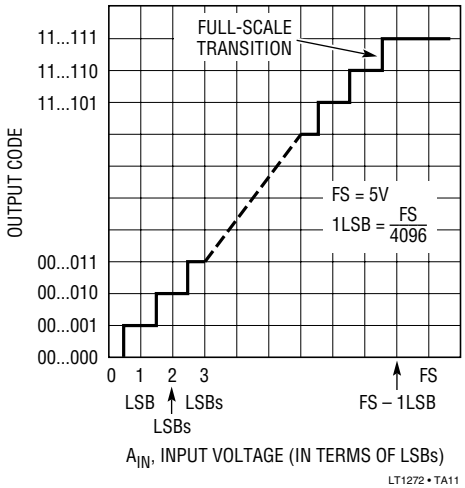

Figure 9. LTC1272 Ideal Input/Output Transfer Characteristic

Unipolar Operation

Figure 9 shows the ideal input/output characteristic for the 0V to 5V input range of the LTC1272. The code transitions occur midway between successive integer LSB values (i.e., 1/2LSB, 3/2LSBs, 5/2LSBs . . . FS – 3/2LSBs). The output code is natural binary with 1 LSB = FS/4096 = (5/4096)V = 1.22mV.

Unipolar Offset and Full-Scale Error Adjustment

In applications where absolute accuracy is important, then offset and full-scale error can be adjusted to zero. Offset error must be adjusted before full-scale error. Figure 10 shows the extra components required for full-scale error adjustment. Zero offset is achieved by adjusting the offset of the op amp driving A_{IN} (i.e., A1 in Figure 10). For zero offset error apply 0.61mV (i.e., 1/2LBS) at V_{IN} and adjust the op amp offset voltage until the ADC output code flickers between 0000 0000 0000 and 0000 0000 0001.

For zero full-scale error apply an analog input of 4.99817V (i.e., FS – 3/2LSBs or last code transition) at V_{IN} and adjust R1 until the ADC output code flickers between 1111 1111 1110 and 1111 1111 1111.

www.BDTIC.com/Linear

APPLICATIONS INFORMATION

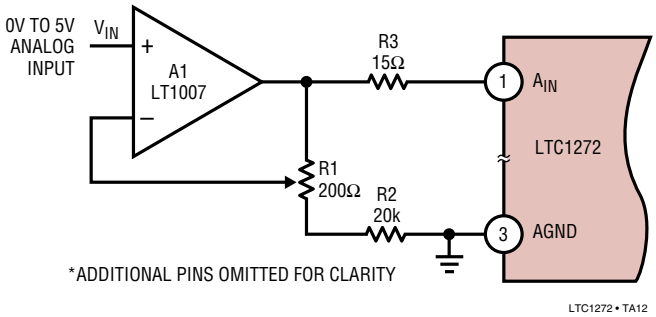

Figure 10. Unipolar 0V to 5V Operation with Gain Error Adjust

Application Hints

Wire wrap boards are not recommended for high resolution or high speed A/D converters. To obtain the best performance from the LTC1272 a printed circuit board is required. Layout for the printed circuit board should ensure that digital and analog signal lines are separated as much as possible. In particular, care should be taken not to run any digital track alongside an analog signal track or underneath the LTC1272. The analog input should be screened by AGND.

A single point analog ground separate from the logic system ground should be established with an analog ground plane at pin 3 (AGND) or as close as possible to the LTC1272, as shown in Figure 11. Pin 12 (LTC1272 DGND) and all other analog grounds should be connected to this single analog ground point. No other digital grounds should be connected to this analog ground point. Low impedance analog and digital power supply common returns are essential to low noise operation of the ADC and the foil width for these tracks should be as wide as possible.

Noise: Input signal leads to A_{IN} and signal return leads from AGND (pin 3) should be kept as short as possible to minimize input noise coupling. In applications where this is not possible, a shielded cable between source and ADC is recommended. Also, since any potential difference in grounds between the signal source and ADC appears as an error voltage in series with the input signal, attention should be paid to reducing the ground circuit impedances as much as possible.

In applications where the LTC1272 data outputs and control signals are connected to a continuously active microprocessor bus, it is possible to get LSB errors in conversion results. These errors are due to feedthrough from the microprocessor to the successive approximation comparator. The problem can be eliminated by forcing the microprocessor into a Wait state during conversion (see Slow Memory Mode interfacing), or by using three-state buffers to isolate the LTC1272 data bus.

Timing and Control

Conversion start and data read operations are controlled by three LTC1272 digital inputs; HBEN, $\overline{CS}$ and $\overline{RD}$. Figure 12 shows the logic structure associated with these inputs. The three signals are internally gated so that a logic "0" is required on all three inputs to initiate a conversion. Once initiated it cannot be restarted until conversion is complete. Converter status is indicated by the $\overline{BUSY}$ output, and this is low while conversion is in progress.

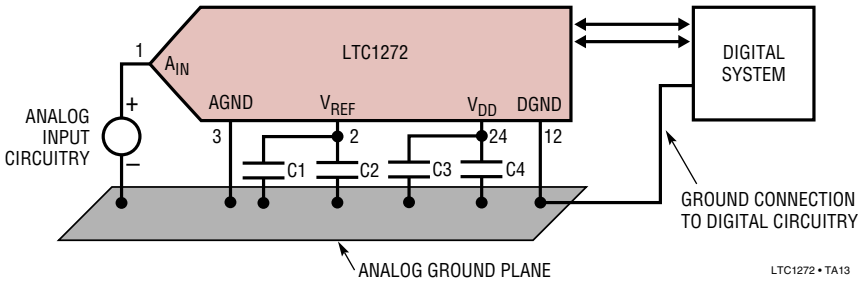

Figure 11. Power Supply Grounding Practice

www.BDTIC.com/Linear

APPLICATIONS INFORMATION

There are two modes of operation as outlined by the timing diagrams of Figures 13 to 17. Slow Memory Mode is designed for microprocessors which can be driven into a Wait state, a Read operation brings $\overline{CS}$ and $\overline{RD}$ low which initiates a conversion and data is read when conversion is complete.

The second is the ROM Mode which does not require microprocessor Wait states. A Read operation brings $\overline{CS}$ and $\overline{RD}$ low which initiates a conversion and reads the previous conversion result.

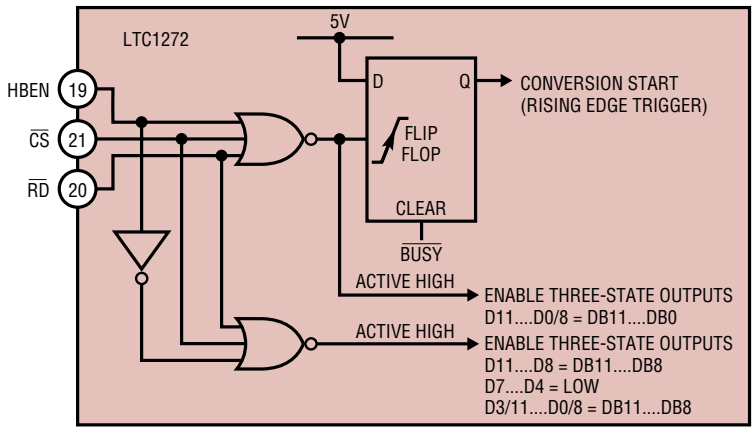

D11....D0/8 ARE THE ADC DATA OUTPUT PINS
DB11....DB0 ARE THE 12-BIT CONVERSION RESULTS

LTC1272 • TA14

Figure 12. Internal Logic for Control Inputs $\overline{CS}$, $\overline{RD}$ and HBEN

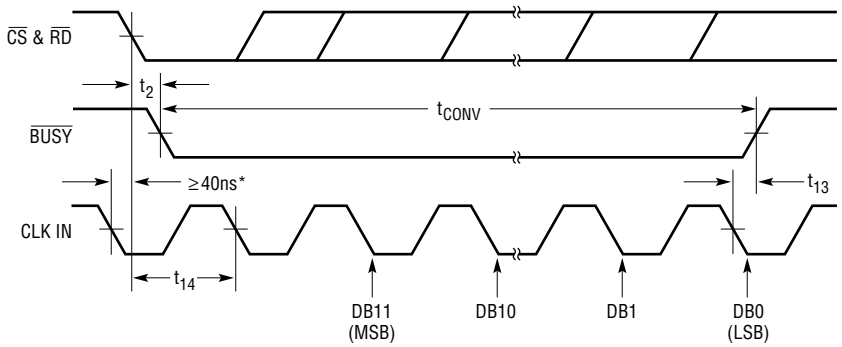

UNCERTAIN CONVERSION TIME FOR 30ns < t_{14} < 180ns
*THE LTC1272 IS ALSO COMPATIBLE WITH THE AD7572 SYNCHRONIZATION MODES.
SEE "DIGITAL INTERFACE" TEXT.

LTC1272 • TA15

Figure 13. $\overline{RD}$ and CLK IN for Synchronous Operation

Table 1. Data Bus Output, $\overline{CS}$ and $\overline{RD}$ = Low

	PIN 4	PIN 5	PIN 6	PIN 7	PIN 8	PIN 9	PIN 10	PIN 11	PIN 13	PIN 14	PIN 15	PIN 16
Data Outputs*	D11	D10	D9	D8	D7	D6	D5	D4	D3/11	D2/10	D1/9	D0/8
HBEN = Low	DB11	DB10	DB9	DB8	DB7	DB6	DB5	DB4	DB3	DB2	DB1	DB0
HBEN = High	DB11	DB10	DB9	DB8	Low	Low	Low	Low	DB11	DB10	DB9	DB8

Note: *D11 . . . D0/8 are the ADC data output pins
DB11 . . . DB0 are the 12-bit conversion results, DB11 is the MSB

www.BDTIC.com/Linear

APPLICATIONS INFORMATION

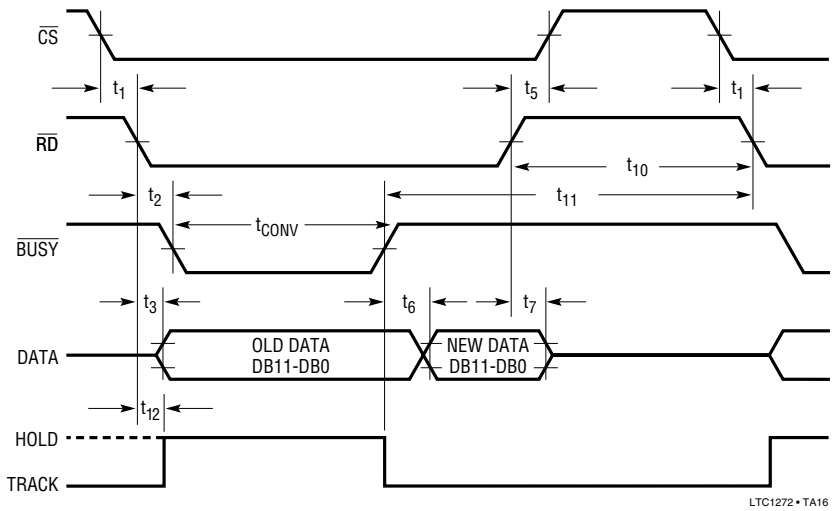

Figure 14. Slow Memory Mode, Parallel Read Timing Diagram

Table 2. Slow Memory Mode, Parallel Read Data Bus Status

Data Outputs	D11	D10	D9	D8	D7	D6	D5	D4	D3/11	D2/10	D1/9	D0/8
Read	DB11	DB10	DB9	DB8	DB7	DB6	DB5	DB4	DB3	DB2	DB1	DB0

Data Format

The output data format can be either a complete parallel load for 16-bit microprocessors or a two byte load for 8-bit microprocessors. Data is always right justified (i.e., LSB is the most right-hand bit in a 16-bit word). For a two byte read, only data outputs D7. . . D0/8 are used. Byte selection is governed by the HBEN input which controls an internal digital multiplexer. This multiplexes the 12 bits of conversion data onto the lower D7. . . D0/8 outputs (4MSBs or 8LSBs) where it can be read in two read cycles. The 4MSBs always appear on D11 . . . D8 whenever the three-state output drives are turned on.

Slow Memory Mode, Parallel Read (HBEN = Low)

Figure 14 and Table 2 show the timing diagram and data bus status for Slow Memory Mode, Parallel Read. $\overline{CS}$ and $\overline{RD}$ going low triggers a conversion and the LTC1272 acknowledges by taking $\overline{BUSY}$ low. Data from the previous conversion appears on the three-state data outputs. $\overline{BUSY}$ returns high at the end of conversion when the output latches have been updated and the conversion result is placed on data outputs D11 . . . D0/8.

Slow Memory Mode, Two Byte Read

For a two byte read, only 8 data outputs D7 . . . D0/8 are used. Conversion start procedure and data output status for the first read operation is identical to Slow Memory Mode, Parallel Read. See Figure 15 timing diagram and Table 3 data bus status. At the end of conversion the low data byte (DB7 . . . DB0) is read from the ADC. A second Read operation with HBEN high, places the high byte on data outputs D3/11 . . . D0/8 and disables conversion start. Note the 4MSBs appear on data outputs D11 . . . D8 during the two Read operations above.

ROM Mode, Parallel Read (HBEN = Low)

The ROM Mode avoids placing a microprocessor into a Wait state. A conversion is started with a Read operation and the 12 bits of data from the previous conversion is available on data outputs D11 . . . D0/8 (see Figure 16 and Table 4). This data may be disregarded if not required. A second Read operation reads the new data (DB11 . . . DB0) and starts another conversion. A delay at least as long as the LTC1272 conversion time plus the 1µs minimum delay between conversions must be allowed between Read operations.

www.BDTIC.com/Linear

APPLICATIONS INFORMATION

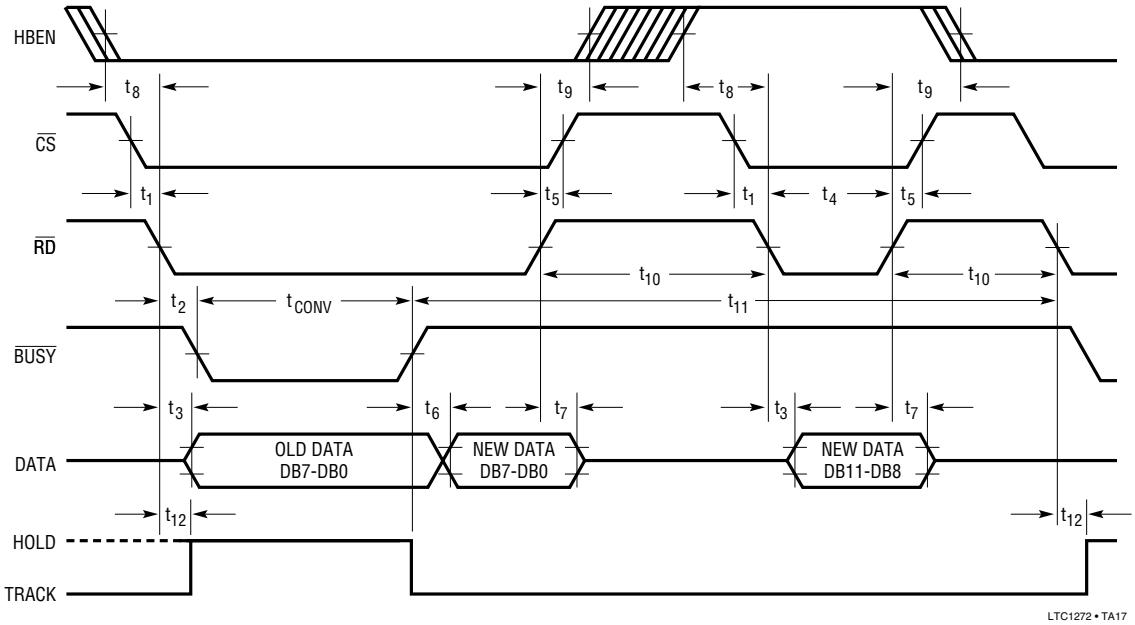

Figure 15. Slow Memory Mode, Two Byte Read Timing Diagram

Table 3. Slow Memory Mode, Two Byte Read Data Bus Status

Data Outputs	D7	D6	D5	D4	D3/11	D2/10	D1/9	D0/8
First Read	DB7	DB6	DB5	DB4	DB3	DB2	DB1	DB0
Second Read	Low	Low	Low	Low	DB11	DB10	DB9	DB8

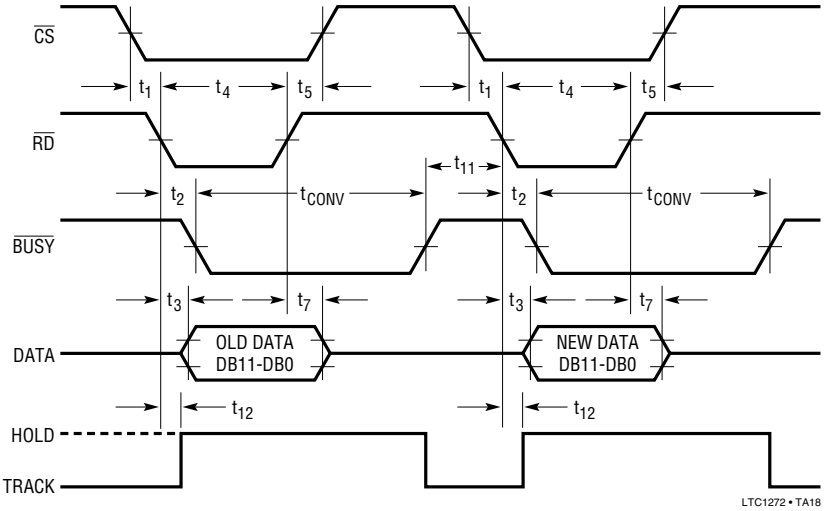

Figure 16. ROM Mode, Parallel Read Timing Diagram

Table 4. ROM Mode, Parallel Read Data Bus Status

Data Outputs	D11	D10	D9	D8	D7	D6	D5	D4	D3/11	D2/10	D1/9	D0/8
First Read (Old Data)	DB11	DB10	DB9	DB8	DB7	DB6	DB5	DB4	DB3	DB2	DB1	DB0
Second Read	DB11	DB10	DB9	DB8	DB7	DB6	DB5	DB4	DB3	DB2	DB1	DB0

www.BDTIC.com/Linear

APPLICATIONS INFORMATION

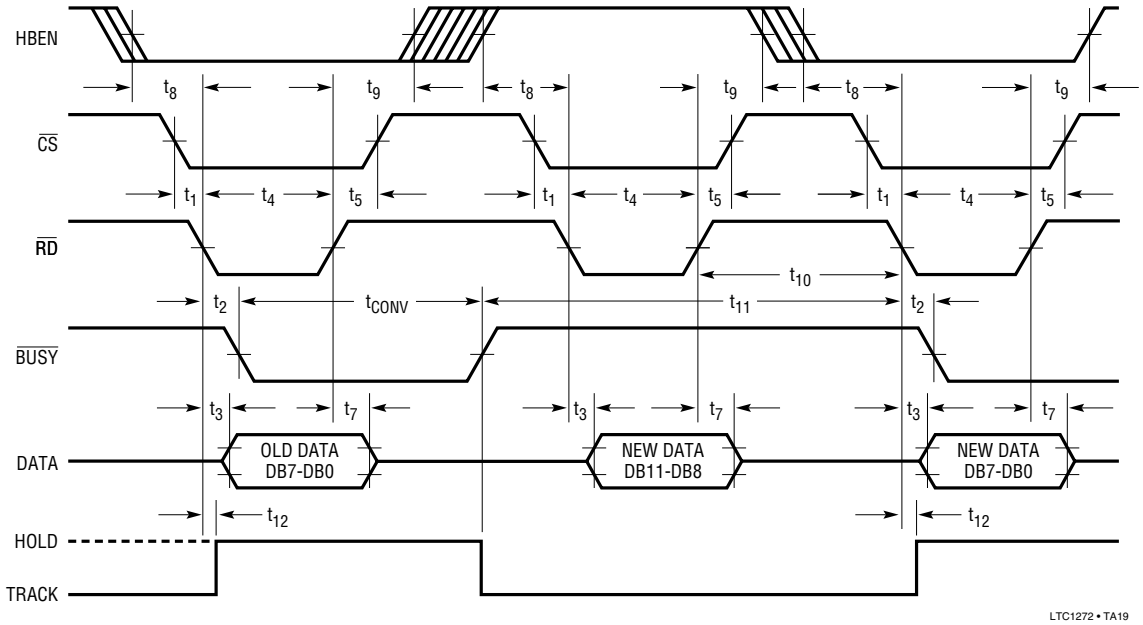

Figure 17. ROM Mode, Two Byte Read Timing Diagram

Table 5. ROM Mode, Two Byte Read Data Bus Status

Data Outputs	D7	D6	D5	D4	D3/11	D2/10	D1/9	D0/8
First Read	DB7	DB6	DB5	DB4	DB3	DB2	DB1	DB0
Second Read	Low	Low	Low	Low	DB11	DB10	DB9	DB8
Third Read	DB7	DB6	DB5	DB4	DB3	DB2	DB1	DB0

ROM Mode, Two Byte READ

As previously mentioned for a two byte read, only data outputs D7 . . . D0/8 are used. Conversion is started in the normal way with a Read operation and the data output status is the same as the ROM Mode, Parallel Read. See Figure 17 timing diagram and Table 5 data bus status. Two more Read operations are required to access the new conversion result. A delay equal to the LTC1272 conversion time must be allowed between conversion start and the second data Read operation. The second Read operation, with HBEN high, disables conversion start and places the high byte (4 MSBs) on data outputs D3/11 . . . DO18. A third read operation accesses the low data byte (DB7 . . . DB0) and starts another conversion. The 4 MSB's appear on data outputs D11 . . . D8 during all three read operations above.

Microprocessor Interfacing

The LTC1272 is designed to interface with microprocessors as a memory mapped device. The $\overline{CS}$ and $\overline{RD}$ control inputs are common to all peripheral memory interfacing. The HBEN input serves as a data byte select for 8-bit processors and is normally connected to the microprocessor address bus.

MC68000 Microprocessor

Figure 18 shows a typical interface for the MC68000. The LTC1272 is operating in the Slow Memory Mode. Assuming the LTC1272 is located at address C000, then the following single 16-bit Move instruction both starts a conversion and reads the conversion result:

```
Move.W $C000,D0
```


www.BDTIC.com/Linear

APPLICATIONS INFORMATION

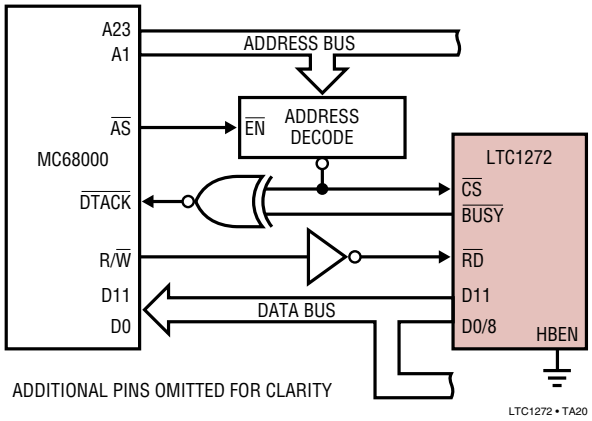

Figure 18. LTC1272 MC68000 Interface

At the beginning of the instruction cycle when the ADC address is selected, BUSY and CS assert DTACK, so that the MC68000 is forced into a Wait state. At the end of conversion BUSY returns high and the conversion result is placed in the D0 register of the microprocessor.

8085A, Z80 Microprocessor

Figure 19 shows a LTC1272 interface for the Z80 and 8085A. The LTC1272 is operating in the Slow Memory Mode and a two byte read is required. Not shown in the figure is the 8-bit latch required to demultiplex the 8085A common address/data bus. A0 is used to assert HBEN, so that an even address (HBEN = LOW) to the LTC1272 will start a conversion and read the low data byte. An odd address (HBEN = HIGH) will read the high data byte. This is accomplished with the single 16-bit Load instruction below.

For the 8085A	LHLD (B000)
For the Z80	LDHL, (B000)

This is a two byte read instruction which loads the ADC data (address B000) into the HL register pair. During the first read operation, BUSY forces the microprocessor to Wait for the LTC1272 conversion. No Wait states are inserted during the second read operation when the microprocessor is reading the high data byte.

TMS32010 Microcomputer

Figure 20 shows an LTC1272 TMS32010 interface. The LTC1272 is operating in the ROM Mode. The interface is designed for a maximum TMS32010 clock frequency of 18MHz but will typically work over the full TMS32010 clock frequency range.

The LTC1272 is mapped at a port address. The following I/O instruction starts a conversion and reads the previous conversion result into data memory.

IN A,PA (PA = PORT ADDRESS)

When conversion is complete, a second I/O instruction reads the up-to-date data into memory and starts another conversion. A delay at least as long as the ADC conversion time must be allowed between I/O instructions.

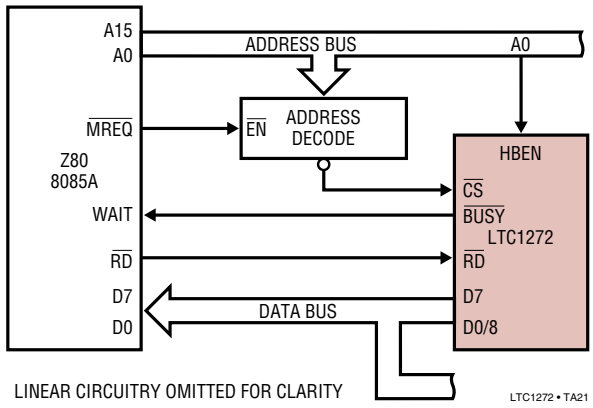

Figure 19. LTC1272 8085A/Z80 Interface

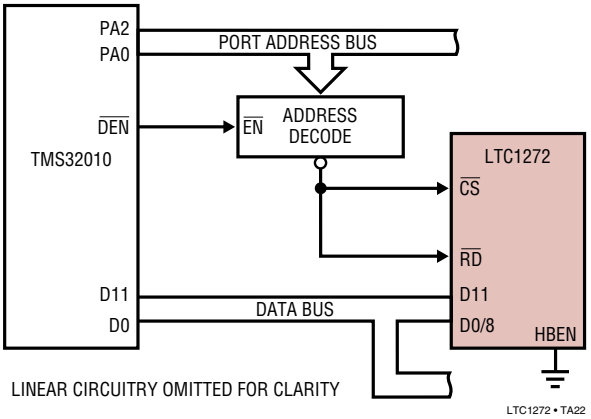

Figure 20. LTC1272 TMS32010 Interface

www.BDTIC.com/Linear

APPLICATIONS INFORMATION

Compatibility with the AD7572

Figure 21 shows the simple, single 5V configuration recommended for new designs with the LTC1272. If an AD7572 replacement or upgrade is desired, the LTC1272 can be plugged into an AD7572 socket with minor modifications. It can be used as a replacement or to upgrade with sample-and-hold, single supply operation and reduced power consumption.

The LTC1272, while consuming less power overall than the AD7572, draws more current from the 5V supply (it draws no power from the –15V supply). Also, a 1µs minimum time between conversions must be provided to allow the sample-and-hold to reacquire the analog input. Figure 22 shows that if the clock is synchronous with $\overline{CS}$ and $\overline{RD}$, it is only necessary to short out the 10Ω series resistor and reverse the polarity of the 10µF bypass capacitor on the V_{REF} pin. The –15V supply is not required and can be removed, or, because there is no internal connection to pin 23, it can remain unmodified. The clock can be considered synchronous with $\overline{CS}$ and $\overline{RD}$ in cases where the LTC1272 CLK IN signal is derived from the same clock as the microprocessor reading the LTC1272.

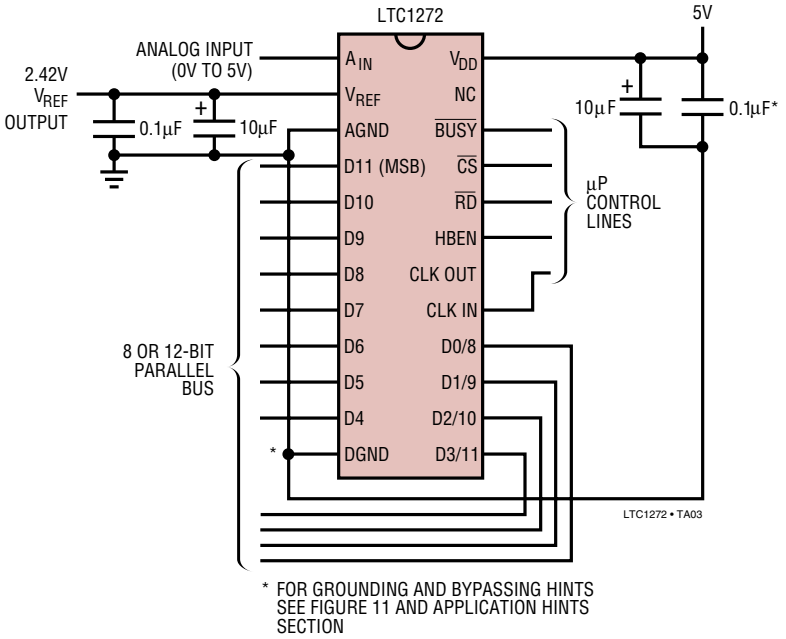

Figure 21. Single 5V Supply, 3µs, 12-Bit Sampling ADC

www.BDTIC.com/Linear

APPLICATIONS INFORMATION

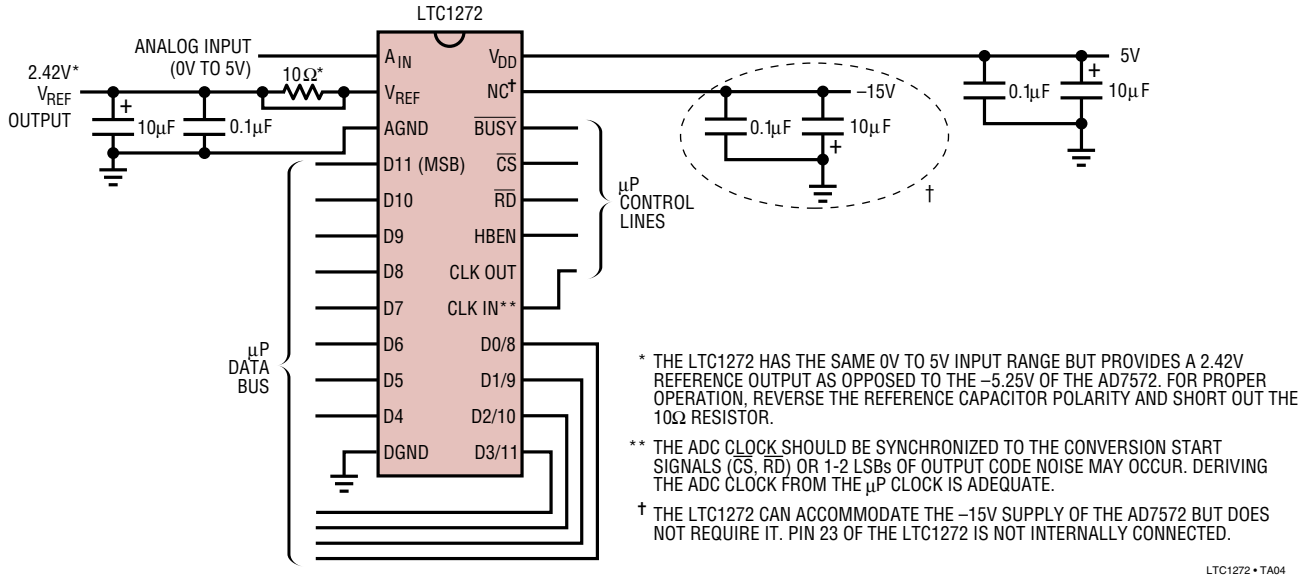

Figure 22. Plugging the LTC1272 into an AD7572 Socket
Case 1: Clock Synchronous with $\overline{CS}$ and $\overline{RD}$

If the clock signal for the AD7572 is derived from a separate crystal or other signal which is not synchronous with the microprocessor clock, then the signals need to be synchronized for the LTC1272 to achieve best analog performance (see Clock and Control Synchronization). The best way to synchronize these signals is to drive the CLK IN pin of the LTC1272 with a derivative of the processor clock, as mentioned above and shown in Figure 22. Another way, shown in Figure 23, is to use a flip-flop to synchronize the $\overline{RD}$ to the LTC1272 with the CLK IN signal. This method will work but has two disavantages over the first: because the $\overline{RD}$ is delayed by the flip-flop, the actual conversion start and the enabling of the LTC1272's $\overline{BUSY}$ and data outputs can take up to one CLK IN cycle to respond to a $\overline{RD}\downarrow$ convert command from the processor. The sampling of the analog input no longer occurs at the processor's falling $\overline{RD}$ edge but may be delayed as much as one CLK IN cycle. Although the LTC1272 will still exhibit excellent DC performance, the flip-flop will introduce jitter into the sampling which may reduce the usefulness of this method for AC systems.

www.BDTIC.com/Linear

APPLICATIONS INFORMATION

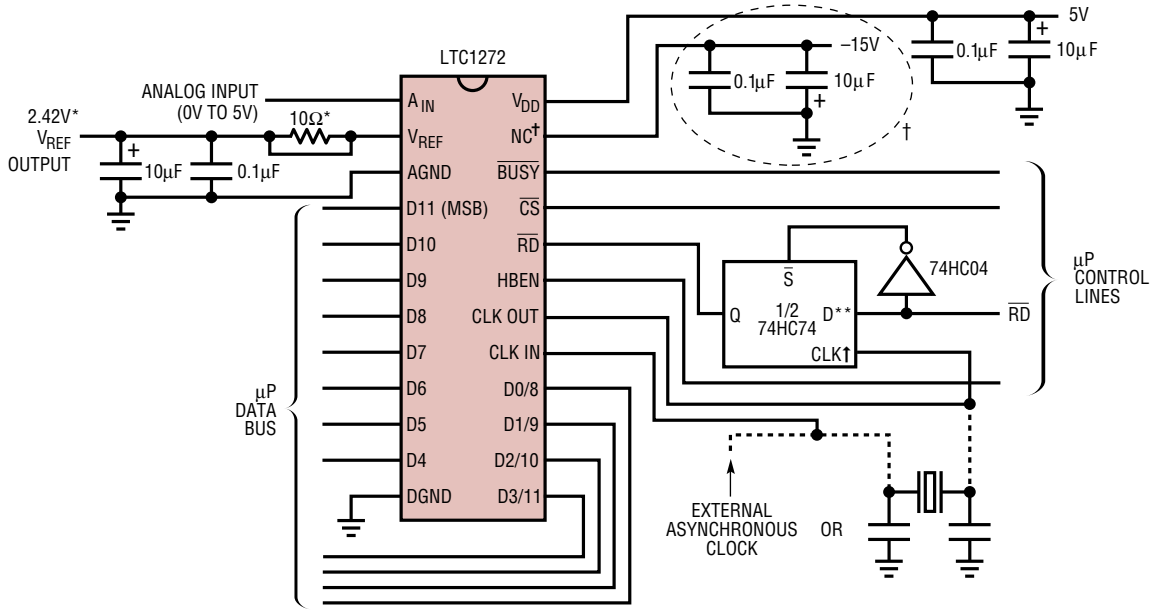

* THE LTC1272 HAS THE SAME 0V TO 5V INPUT RANGE BUT PROVIDES A 2.42V REFERENCE OUTPUT AS OPPOSED TO THE –5.25V OF THE AD7572. FOR PROPER OPERATION, REVERSE THE REFERENCE CAPACITOR POLARITY AND SHORT OUT THE 10Ω RESISTOR.

** THE D FLIP-FLOP SYNCHRONIZES THE CONVERSION START SIGNAL ($\overline{RD}$↓) TO THE ADC CLK_{OUT} SIGNAL TO PREVENT OUTPUT CODE NOISE WHICH OCCURS WITH AN ASYNCHRONOUS CLOCK.

† THE LTC1272 CAN ACCOMMODATE THE –15V SUPPLY OF THE AD7572 BUT DOES NOT REQUIRE IT. PIN 23 OF THE LTC1272 IS NOT INTERNALLY CONNECTED.

LTC1272 • TA05

Figure 23. Plugging the LTC1272 into an AD7572 Socket Case 2: Clock Not Synchronous with $\overline{CS}$ and $\overline{RD}$

Information furnished by Linear Technology Corporation is believed to be accurate and reliable. However, no responsibility is assumed for its use. Linear Technology Corporation makes no representation that the interconnection of its circuits as described herein will not infringe on existing patent rights.
www.BDTIC.com/Linear

PACKAGE DESCRIPTION

N Package
24-Lead PDIP (Narrow .300 Inch)
(Reference LTC DWG # 05-08-1510)

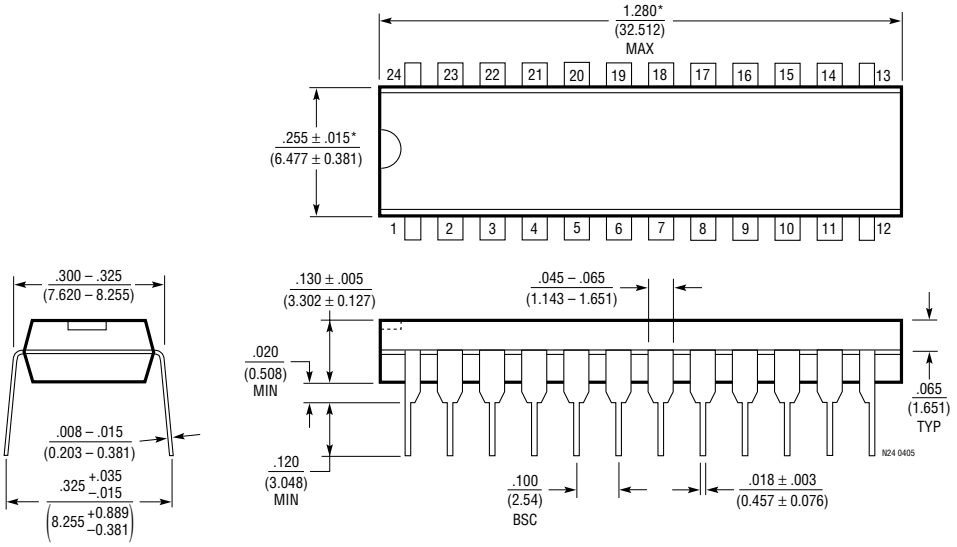

NOTE:
1. DIMENSIONS ARE $\frac{\text{INCHES}}{\text{MILLIMETERS}}$

*THESE DIMENSIONS DO NOT INCLUDE MOLD FLASH OR PROTRUSIONS.
MOLD FLASH OR PROTRUSIONS SHALL NOT EXCEED .010 INCH (0.254mm)

SW Package
24-Lead Plastic Small Outline (Wide .300 Inch)
(Reference LTC DWG # 05-08-1620)

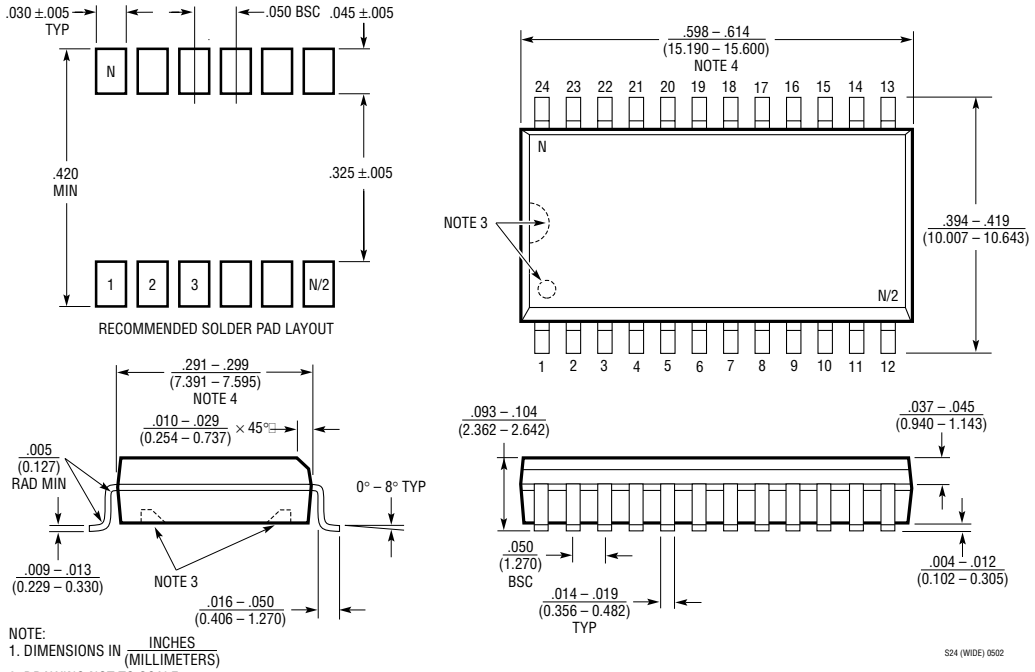

NOTE:
1. DIMENSIONS IN $\frac{\text{INCHES}}{\text{(MILLIMETERS)}}$
2. DRAWING NOT TO SCALE
3. PIN 1 IDENT, NOTCH ON TOP AND CAVITIES ON THE BOTTOM OF PACKAGES ARE THE MANUFACTURING OPTIONS. THE PART MAY BE SUPPLIED WITH OR WITHOUT ANY OF THE OPTIONS
4. THESE DIMENSIONS DO NOT INCLUDE MOLD FLASH OR PROTRUSIONS. MOLD FLASH OR PROTRUSIONS SHALL NOT EXCEED .006" (0.15mm)

Linear Technology Corporation
1630 McCarthy Blvd., Milpitas, CA 95035-7417
(408) 432-1900 • FAX: (408) 434-0507 • www.linear.com
www.BDTIC.com/Linear
LT 0107 REV B • PRINTED IN USA
© LINEAR TECHNOLOGY CORPORATION 1994