Electrical Diagram

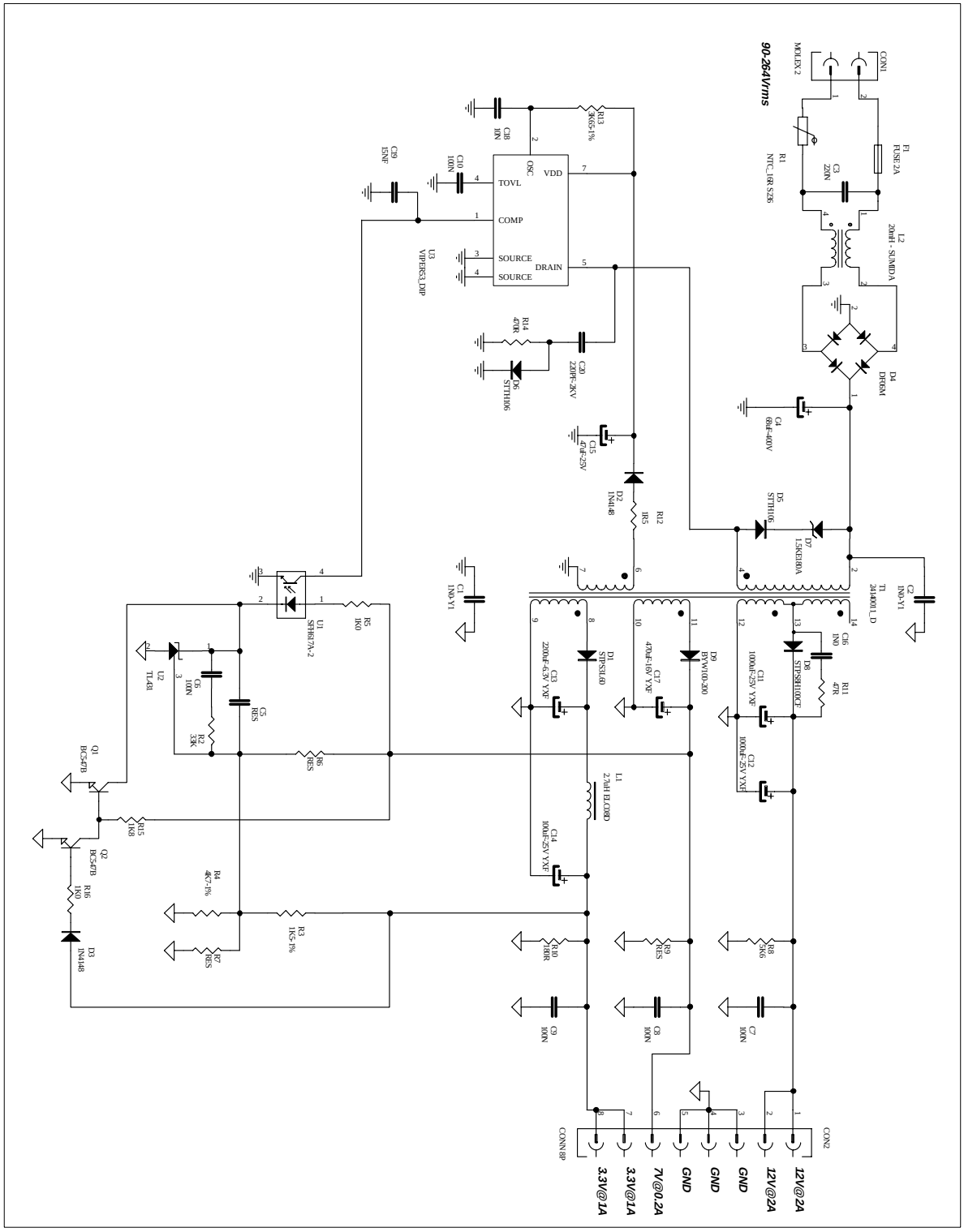

www.BDTIC.com/ST