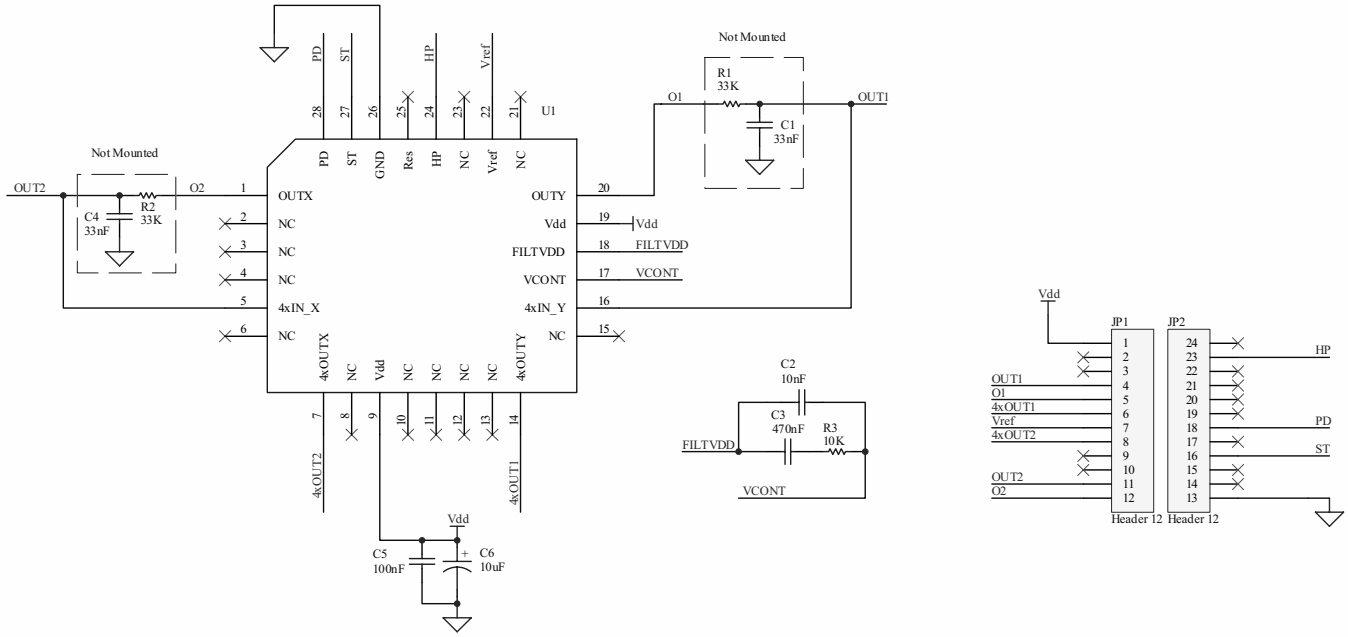


www.BDTIC.com/ST

| | | |
|---|---|---|
| Title STEVAL-MKI082V1 | | |
| Size: A3 | Number: | Revision: |
| Date: 10/5/2009 | Time: 1:38:50 PM | Sheet of |
| File: MS 4X5 G2A Adapter to DIL24-Rev1_0 | | |