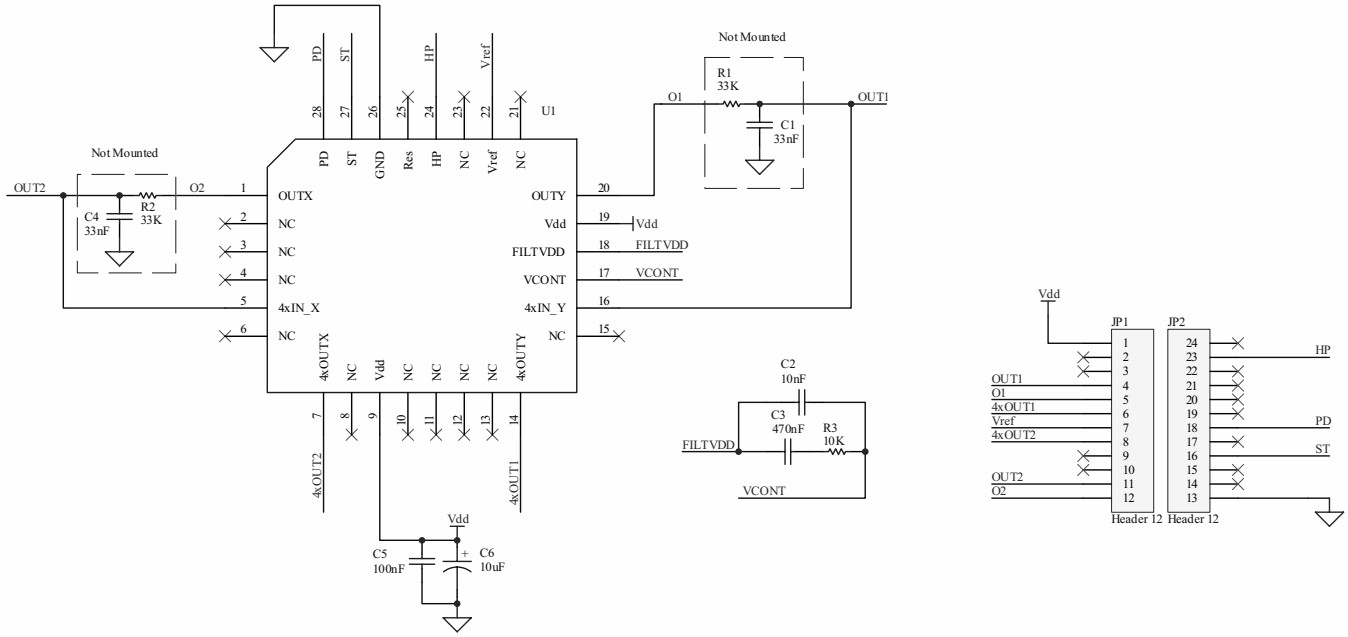

www.BDTIC.com/ST

Title STEVAL-MKI084V1			
Size: A3	Number:	Revision:	
Date: 10/5/2009	Time: 1:38:50 PM	Sheet of	
File: MS 4X5 G2A Adapter to DIL24-Rev1_0			