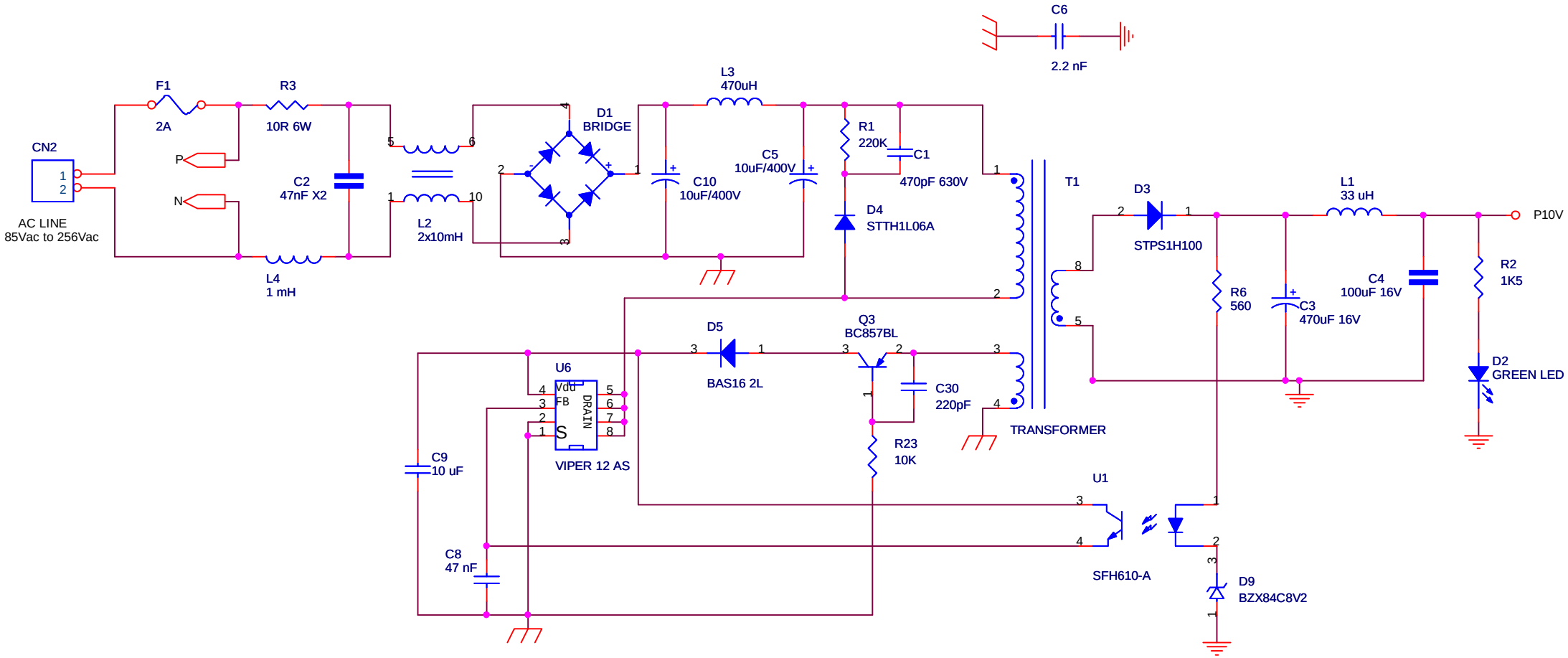

www.BDTIC.com/ST