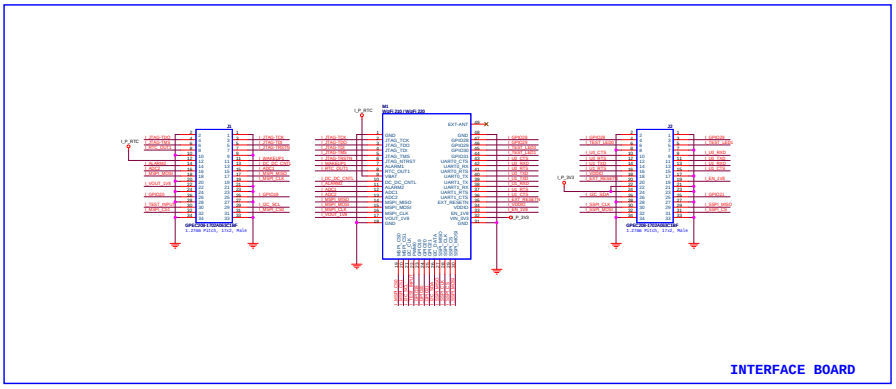


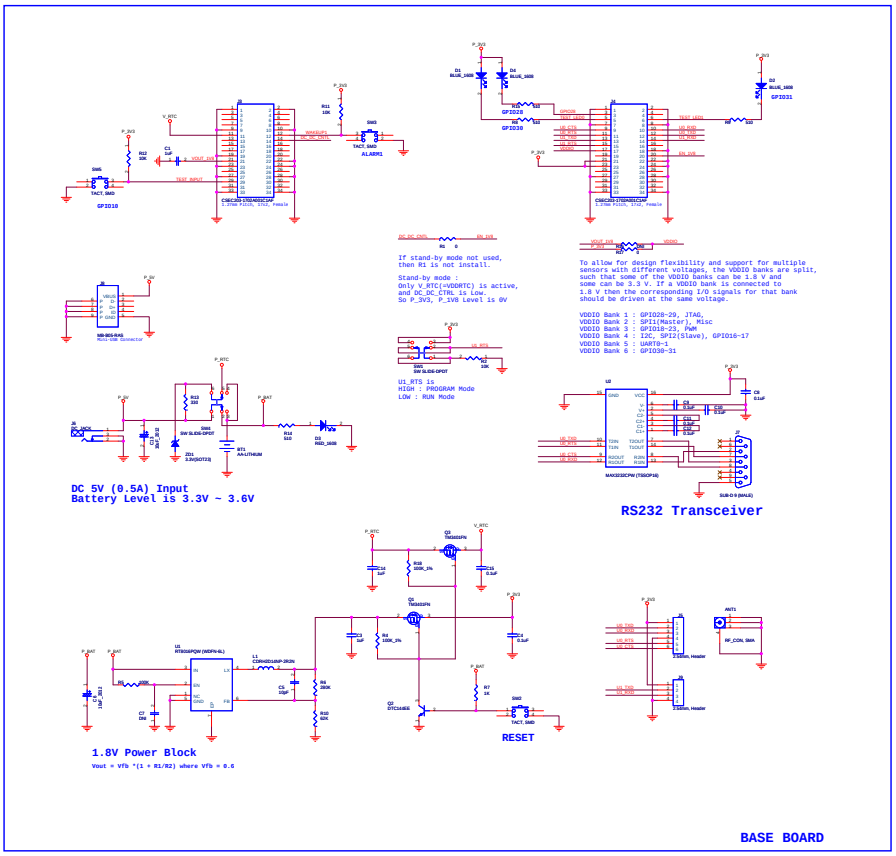


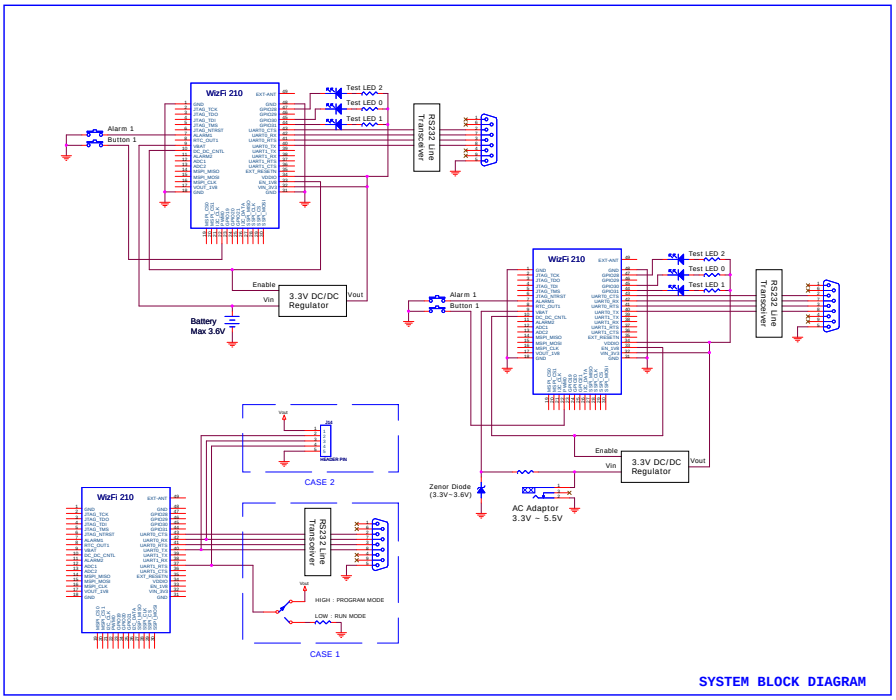


www.BDTIC.com/WIZnet