ANALOG DEVICES

16-Lead Lead Frame Chip Scale Package [LFCSP_LQ]
4 x 4 mm Body, Thick Quad
(CP-16-5a*)
Dimensions shown in millimeters

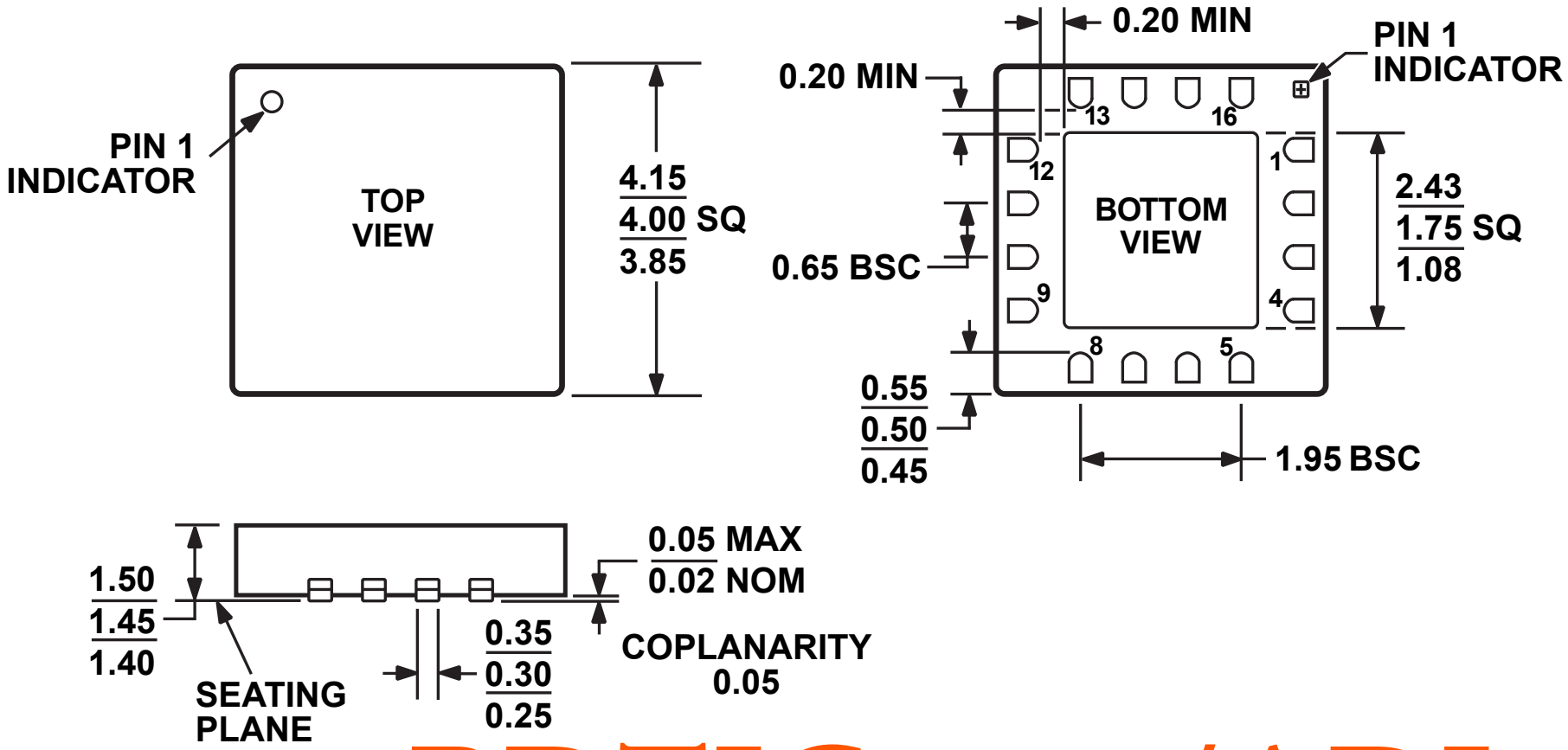

www.BDTIC.com/ADI

*STACKED DIE WITH GLASS SEAL.

072606-0